Fiberoptic Light Guides

Fiberoptic Light Guides

Shine a flashlight into one end of either a flexible plastic or glass fiberoptic light guide and you will see light coming out of the other end. This ability to guide light from one place to another provides many advantages when applied to industrial photoelectric sensing.

Fiberoptic Light Guides are flexible and small enough to fit into difficult sensing sites. This allows the sensor to be located in a more convenient, remote location — out of harm's way. Fibers are resistant to high temperatures, vibration, condensation, and corrosion.

One of the main advantages of glass fiberoptic light guides is that they can be sized and shaped to provide optical advantages. When fiberoptic light guides are utilized, they become the optics of the sensing system.

At the sensing site, the size and shape of the fiberoptic bundle carrying the light controls the size and shape of the transmitted light beam. The size and shape of the fiberoptic bundle receiving the light beam controls the effective viewing area of the sensing system.

Lenses are available to provide additional control of the transmitted and received light beams. Both Beam Break and Beam Make sensing modes are adaptable to fiberoptic sensing.

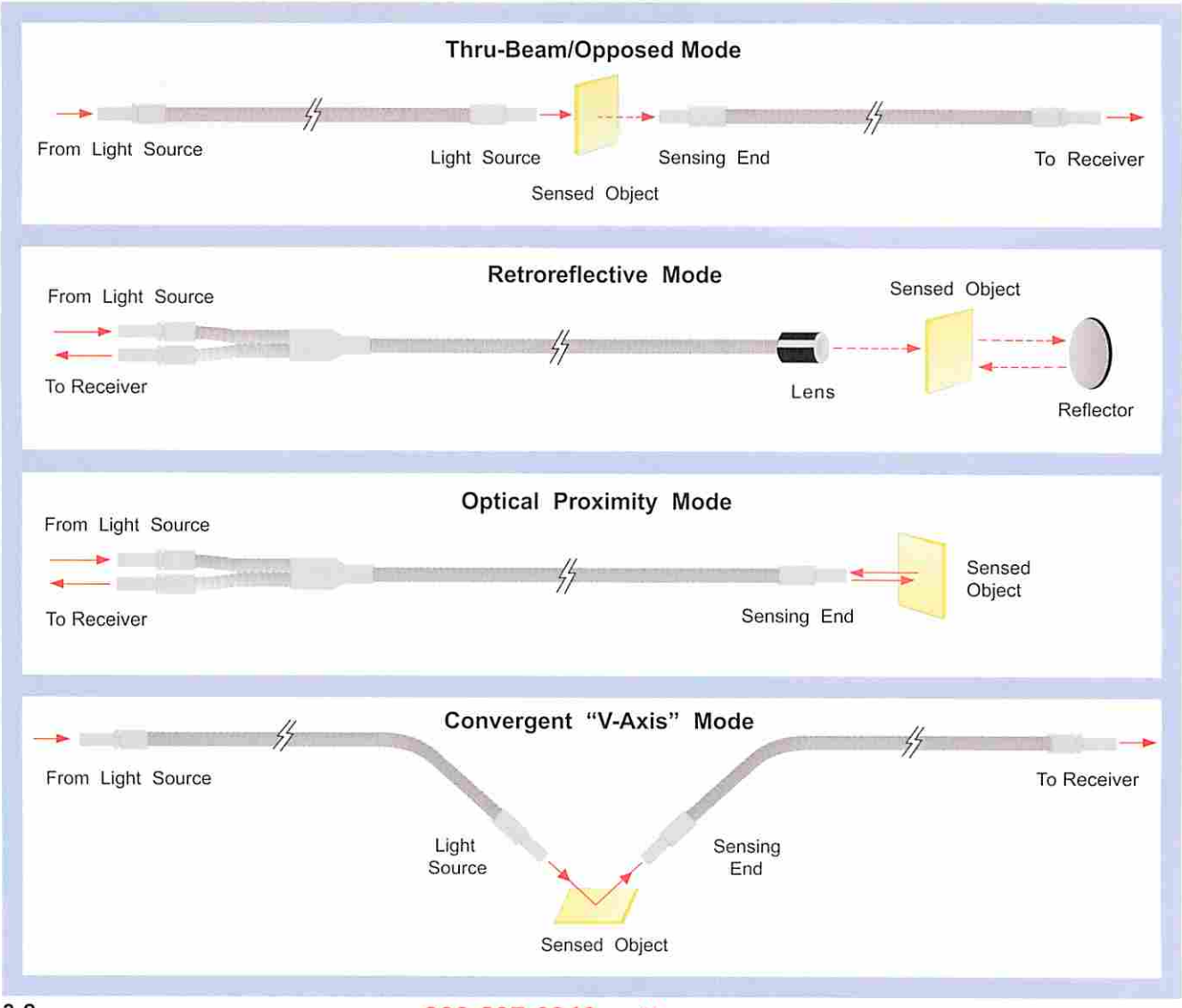

Hints & Tips

1. USING STRAIGHT LIGHT GUIDES

Straight light guides are a bundle of glass fibers, with the same number of glass fibers on both ends.

• Thru-Beam/Opposed Mode Sensing

Straight light guides are used in pairs. One light guide is used to transmit the light from the sensor's light source to the sensing site. Here the light beam is focused, or directed across the area the target is to be passing. The receiving light guide is located on the opposite side, aligned in position to receive the light beam. Then this light guide transmits the received light back to the sensor's photo detector. When a target or object passes through the light beam, the sensor responds to the absence of light and switches its output accordingly. This is called Beam Break, or thru-beam sensing. (Refer to illustrations)

• Convergent "V" Axis Mode

At times thru-beam and proximity sensing won't work for a particular application. By using a pair of straight fibers directed at an object in a "V" configuration, a certain part of the object can be detected. (Refer to illustrations)

2. USING BIFURCATED LIGHT GUIDES

Bifurcated light guides start out as one bundle of glass fibers. This single bundle is then split into two separate bundles of fibers at the sensor end, and left as one randomly mixed bundle at the sensing end.

• Beam Break Sensing or Retroreflective Mode

The sensing tip of the fiber is placed on one side of the detection path with a reflector on the other. The object passes between the fiber and the reflector, breaking the beam and switching the output of the sensor. (Refer to illustrations)

• Beam Make Sensing or Proximity Mode

One half of the fiber transmits the light to the sensing site. The other half transmits the reflecting or diffusing light off the surface of the target back to the sensor's photodetector. This "proximity mode" sensing is used to sense nearby objects.

3. EXPLOSIVE ENVIRONMENTS WARNING

While fiberoptics are considered to be intrinsically safe, the sheathing is a hollow tube that could conceivably provide a flame path. Additionally, the photoelectric sensor must be placed into an approved enclosure.

4. LONG FIBERS

Glass fibers absorb 10% of the remaining light for each foot of glass the light travels; 15-foot fibers have brighter beams than 20-foot fibers, etc. Fibers can be ordered in longer lengths in 12-inch increments up to 30 feet.

5. ROUTING/BEND RADIOUS

Avoid sharp bends when routing light guides around machines. A good minimum bend radius is approximately 10 times the jacket diameter.

6. WATERPROOF

Liquid inside the fiber's protective jacket will lower transmission. Use PVC monocoil jackets in wet locations.

7. REPAIRS

Fiberoptics must never be cut or broken. Never pull on a fiberoptic's protective jacket. They cannot be repaired or spliced. The tips cannot be bent unless specifically noted. They are filled with epoxy, and will break. Abrasion can scratch the face of the fiberoptic bundle and lower its performance.

8. CLEANING

Avoid dirt build-up on the bundle face. Clean with filtered air, soap and water, glass cleaners, toothbrushes, etc. Avoid abrasives.

9. FIBEROPTIC LIGHT GUIDES TEMPERATURE RATINGS

GLASS FIBERS (Type 304 stainless steel)

Standard Fibers

Excess heat above the rated temperature damages the epoxy in the tips, or melts the PVC monocoil jacket.

- **Flexible Stainless Steel Jacketing**
  Operating temperatures from -50°F to +525°F (-45°C to +275°C)
- **PVC Monocoil Jacketing**
  Operating temperatures from -40°F to +220°F (-40°C to +105°C)

High Temperature Fibers

On various tests our high temperature fiberoptics were subjected to temperatures above 500°C for ten hours, and they held their bonding elements without failure.

- **Stainless Steel Jacketing (Type 304)**
  Operating temperatures from -50°F to +900°F (-45°C to +480°C)

PLASTIC FIBERS

PLASTIC FIBER OPTIC SPECIFICATIONS	
Operating Temperature	-40° to 80° C (-40° to 176° F)
Sensing Range	Dependent on Fiber & Sensor Combination
Construction	Optical Fiber: Acrylic Monofilament
	Protective Jacket: Black Polyethylene
	Threaded End Tips & Hardware: Nickel Plated Brass
	Probe End Tips: SUS Stainless Steel
Minimum Bend Radius	.47" (12 mm) for .020" (0.5 mm) Fibers
	.98" (25 mm) for .040" (1.0 mm) Fibers
Chemical Resistance	Core is made of acrylic. Avoid exposing core to acids and aggressive bases as well as solvents. Jacket of fiber will provide a degree of protection from most chemical environments.

Fiberoptic Light Guides

1. Select mode of sensing best suited to your application, e.g., "straight light guide" for Beam Break/opposed mode sensing, or "bifurcated light guide" for Beam Make/proximity sensing.
2. Determine whether the standard size or the miniature fibers will work best.
3. Select "stainless steel armored cable" for most applications, including high temperatures, or "PVC jacketed monocoil" for wet applications.
4. Select fiberoptic bundle size and shape that optimize the viewing area and provide the greatest amount of contrast deviation as displayed on the CONTRAST INDICATOR.
5. Select the tip configuration that best fits the sensing needs, such as, right angle, straight, stainless or brass threaded (both 1.5" and .625" lengths), or side view.
6. Use the Glass Fiberoptic Model Number Matrix below to create the model number that matches your selected sensing mode, jacketing, fiberoptic bundle, size, and tip configuration.

Plastic Fiberoptic Light Guides

Model numbers for plastic fibers do not fit this matrix. If you have a need for a plastic fiber, look through this section and determine the tip configuration and fiber you require. See drawings for plastic fiber bundle sizes.

Model Number Matrix

TIP CONFIGURATION DESIGNATOR

Standard Glass

T – 5/16" 24 THD x 1.5" Brass Threaded
TL – 5/16" 24 THD x .625" Brass Threaded
TR – 5/16" 24 THD x 1.5" Threaded Right Angle
TLR – 5/16" 24 THD x .625" Threaded Right Angle
TS – 5/16" 24 THD x 1.5" SS Threaded
TRS – 5/16" 24 THD x 1.5" SS Threaded Right Angle
TLRS – 5/16" 24 THD x .625" SS Threaded Right Angle
RT – 5/16" 24 THD x 1.5" Right Angle Threaded
RTL – 5/16" 24 THD x .625" Right Angle Threaded
RTS – 5/16" 24 THD x 1.5" SS Right Angle Threaded
RTLS – 5/16" 24 THD x .625" SS Right Angle Threaded
RS – Side View Right Angle Tip
A – .187" Tip with B or E Bundle Size
AR – .187" Tip with B or E Bundle Size with Right Angle
S – Stainless Steal Tip (add to end of model number)
L – Shorter Threaded Tip .625"

Miniature Glass Fibers

The following suffixes are different for Miniature Fibers

T – I0 x 32 THD Brass
TM4 – M4 x 0.70 THD Stainless Steel Threaded Tip
TM6 – M6 x 0.70 THD Stainless Steel Threaded Tip

Plastic Fibers

TL – M2.6 x 0.45 THD, M4 x 0.70 THD
TRL – M2.6 x 0.45 THD, M4 x 0.70 THD, Right Angle
T70 – 70 mm needle tip, M3 x 0.50 THD
T – 3 mm straight tip, M3 x 0.50 THD
T35 – 35 mm needle tip, M3 x 0.50 THD

BUNDLE DESIGNATOR

Glass

A – .125"
B – .062"
C – .032" x .382" Rectangle
E – .046"
H – .015"
J – .027"
K – .020" x .150" Rectangle, A Tip
L – .057" 3" Bendable
P – .010" x 1.50" Rectangle

Miniature Glass

The following suffixes are different for Miniature Fibers

A – 0.090"
C – 0.250" X 0.025"

Plastic

G, H, S, W, Y, Z, Q, CZ
Diplex fibers have 2 plastic fibers fused together.

NON-STANDARD DESIGNATOR

Blank – Standard Fiber
H – High Temp Fiber
S – Stiff

XXXX-X-XXXXXXX

STYLE DESIGNATOR

F – Standard Fiber
BF – Bifurcated Fiber
MF – Miniature Straight
MBF – Miniature Bifurcated
PF – Plastic Fiber
PFD – Plastic Fiber Diplex

LENGTH DESIGNATOR

36 – 36" Glass Standard Length
Other lengths available in 12" increments
Plastic (See Drawing)

JACKET DESIGNATOR

Blank – Stainless Steel
P – PVC Monocoil

Consult the factory for custom fibers and tips.

This section lists only the most popular fiberoptic light guides. Many more configurations are also available directly from stock. Consult your local sales representative or the factory with your requirements.

JACKETING FOR FIBEROPTIC LIGHT GUIDES

Glass Fiber – Flexible Stainless Steel Armored Cables

Stainless steel armored cables (Type 304 Stainless) provide maximum protection against shock and abrasion. The interlocked metal hose is both flexible and strong. However, it is not waterproof, oil tight, or vapor proof. Standard operating temperatures from -50°F to 525°F (-45°C to 275°C). High temperature from -50°F to +900°F (- 45°C to +480°C).

Glass Fiber – PVC Jacketed Monocoil

PVC jacketed monocoil provides ample protection for most industrial applications. It is a flat-wound steel spring, forming a crush-proof flexible tube around the glass. PVC monocoil fibers are waterproof, oil tight, crush resistant, and very flexible. Operating temperatures from -40°F to 220°F (-40°C to 105°C) Not available in High Temperature. PVC Jacketed Monocoil (add Suffix "P" to Model Numbers).

Miniature Glass Fiber – PVC and Stainless Steel Cables

Smaller O.D, smaller tip configurations, with the same flexibility and durability as our standard fiber optic light guides. Smaller tips and diameter allow these fiber optics to fit into smaller spaces for mechanic constraint issues, and still provide a robust and chemical resistant solution for difficult sensing tasks in harsh environments.

Plastic Fiber – Fluorinated Polymer Jacket

Core – Polymethyl Methacrylate (ultra grade) with an allowable bending radius of >17mm. Operating temperatures from -40°F to +185°F (-40°C to +85°C).

Note: Due to their light transmission properties, plastic fiberoptic light guides are recommended for use only with visible light sensors.

CUSTOM FIBERS

Custom Fiberoptics are a **TRI-TRONICS**® specialty. In most cases, we can meet your "special requirements" for customized tip configurations, fiber bundle sizes, and cable lengths, all with quick delivery. All requests for custom fiberoptic light guides must include a detailed drawing showing the critical tolerances before a quotation can be provided, to ensure construction requirements and tolerances are within **TRI-TRONICS**® capabilities.

Important: Custom fiberoptic light guides are non-refundable and non-returnable. Suitability for purpose is not guaranteed. Custom length fibers are +/- .5 inches per foot.

EXAMPLES:

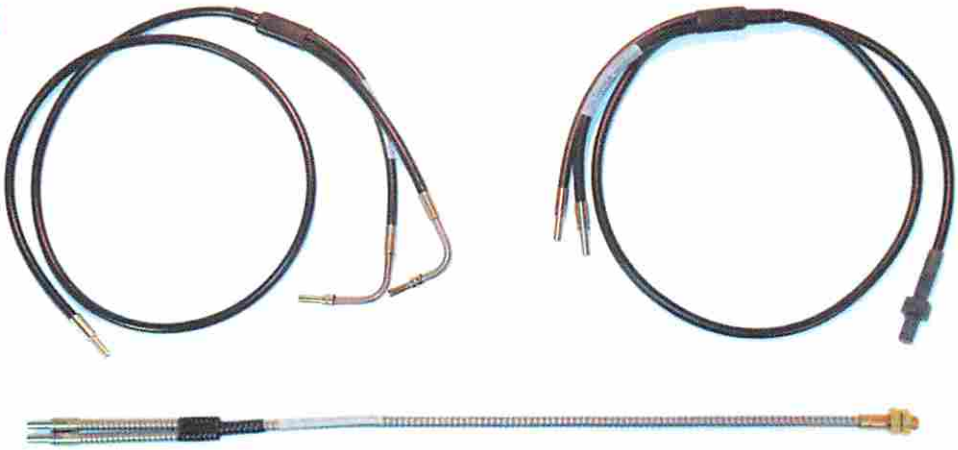

Glass Single Light Guides

Straight Barrel Tip
Stainless Steel Jacket

MODEL	BUNDLE SIZE
F-A-36	.125"
F-B-36A	.062"
F-E-36A	.046"

PVC Monocoil Jacket

MODEL	BUNDLE SIZE
F-A-36P	.125"
F-B-36AP	.062"
F-E-36AP	.046"

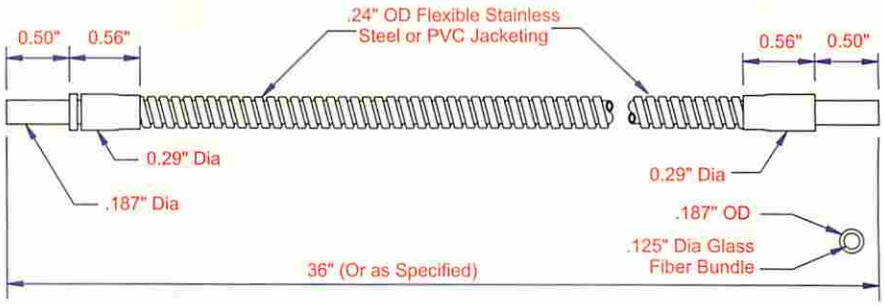

Right AngleTip
Stainless Steel Jacket

MODEL	BUNDLE SIZE
F-A-36R	.125"
F-B-36AR	.062"
F-E-36AR	.046"

PVC Monocoil Jacket

MODEL	BUNDLE SIZE
F-A-36RP	.125"
F-B-36ARP	.062"
F-E-36ARP	.046"

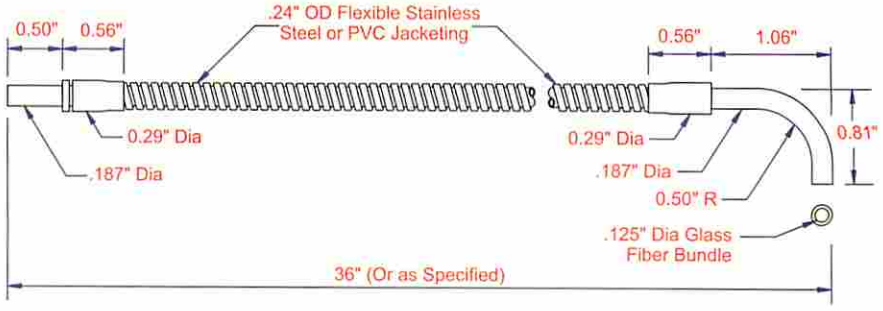

Right Angle Tip, then Threaded
Stainless Steel Jacket

MODEL	BUNDLE SIZE
F-A-36RT	.125"
F-B-36RT	.062"
F-E-36RT	.046"

PVC Monocoil Jacket

MODEL	BUNDLE SIZE
F-A-36RTP	.125"
F-B-36RTP	.062"
F-E-36RTP	.046"

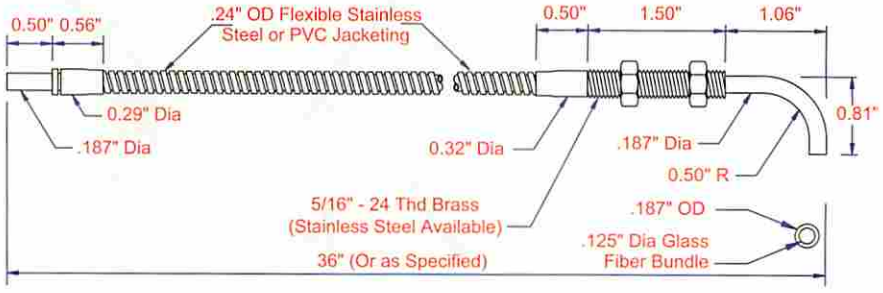

Glass Single Light Guides

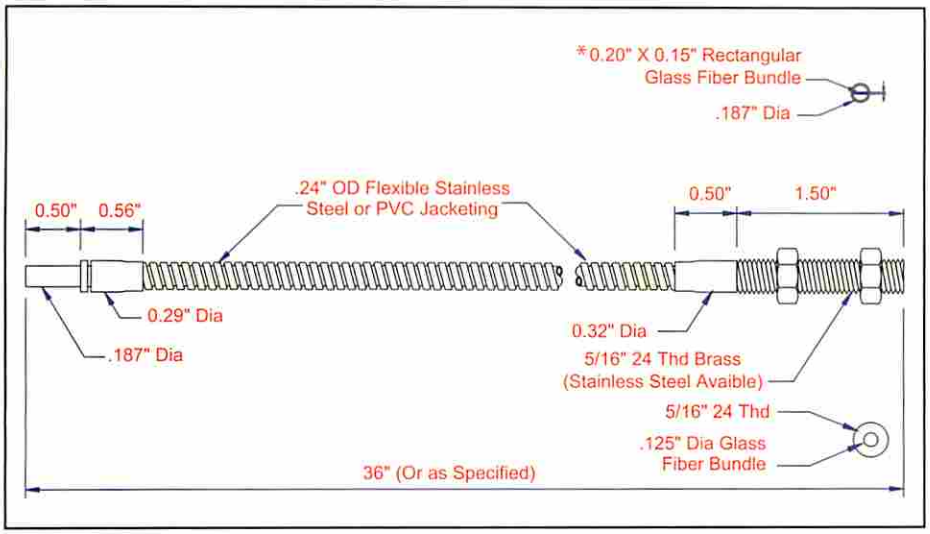

Straight Threaded Tip Stainless Steel Jacket

MODEL	BUNDLE SIZE
F-A-36T	.125"
F-B-36T	.062"
F-E-36T	.046"
*F-K-36T	.020" x .15"

PVC Monocoil Jacket

MODEL	BUNDLE SIZE
F-A-36TP	.125"
F-B-36TP	.062"
F-E-36TP	.046"
*F-K-36TP	.020" x .15"

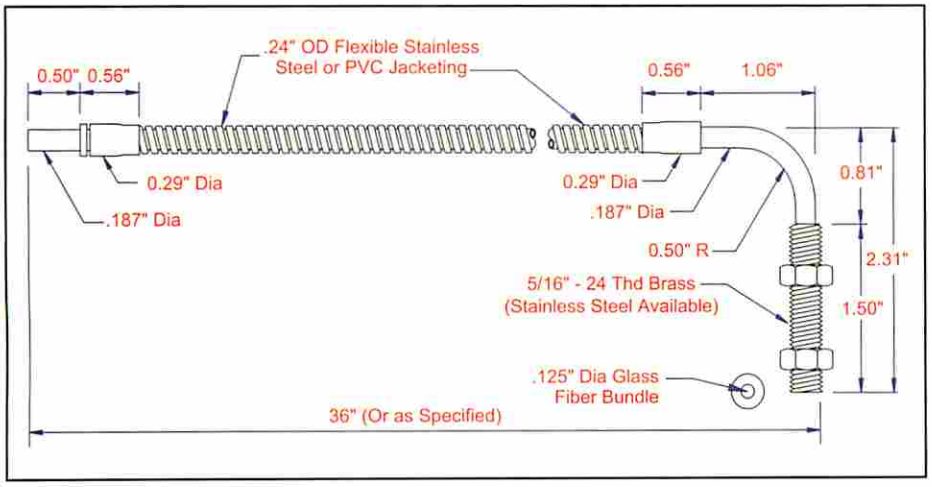

Threaded Tip, then Right Angle Stainless Steel Jacket

MODEL	BUNDLE SIZE
F-A-36TR	.125"
F-B-36TR	.062"
F-E-36TR	.046"

PVC Monocoil Jacket

MODEL	BUNDLE SIZE
F-A-36TRP	.125"
F-B-36TRP	.062"
F-E-36TRP	.046"

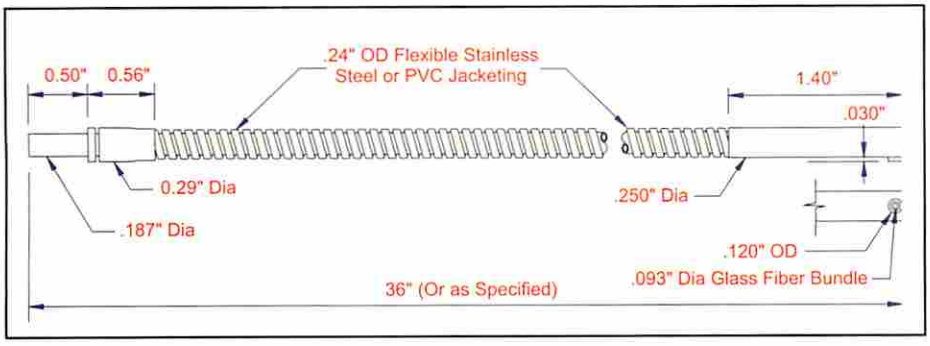

Side View, Right AngleTip Stainless Steel Jacket

MODEL	BUNDLE SIZE
F-A-36RS	.093"

PVC Monocoil Jacket

MODEL	BUNDLE SIZE
F-A-36RSP	.093"

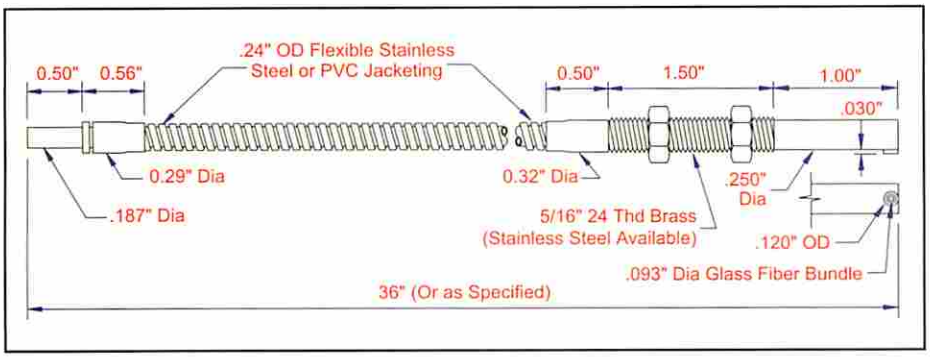

Side View, Right Angle Threaded Stainless Steel Jacket

MODEL	BUNDLE SIZE
F-A-36RST	.093"

PVC Monocoil Jacket

MODEL	BUNDLE SIZE
F-A-36RSTP	.093"

Drawing available at ttco.com

Straight Needle Tip
Stainless Steel Jacket

MODEL	BUNDLE SIZE
F-B-36	.062"

PVC Monocoil Jacket

MODEL	BUNDLE SIZE
F-B-36P	.062"

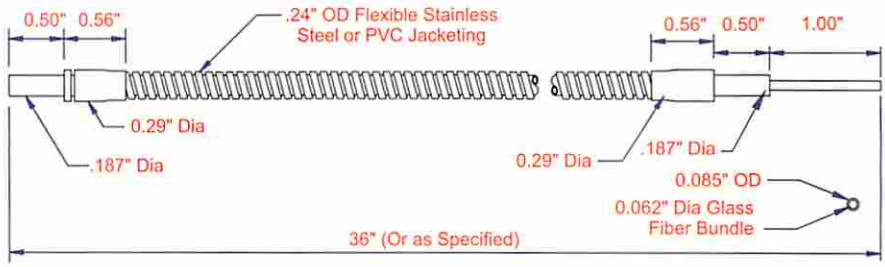

Right Angle Needle Tip
Stainless Steel Jacket

MODEL	BUNDLE SIZE
F-B-36R	.062"

PVC Monocoil Jacket

MODEL	BUNDLE SIZE
F-B-36RP	.062"

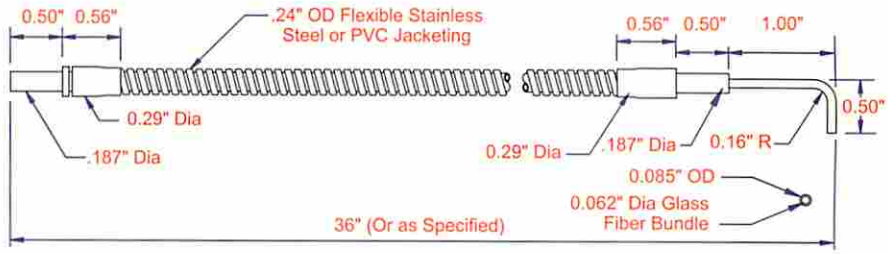

Straight Needle Tip
Stainless Steel Jacket

MODEL	BUNDLE SIZE
F-E-36	.046"

PVC Monocoil Jacket

MODEL	BUNDLE SIZE
F-E-36P	.046"

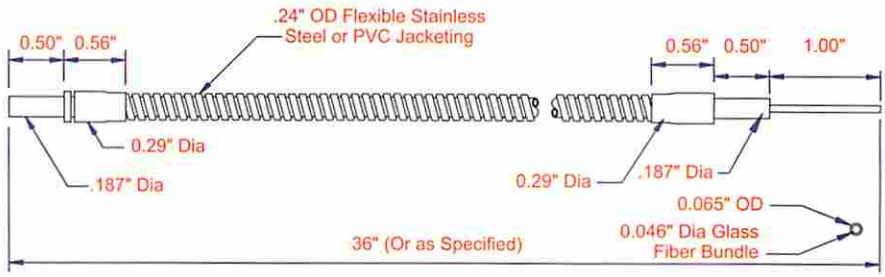

Glass Single Light Guides

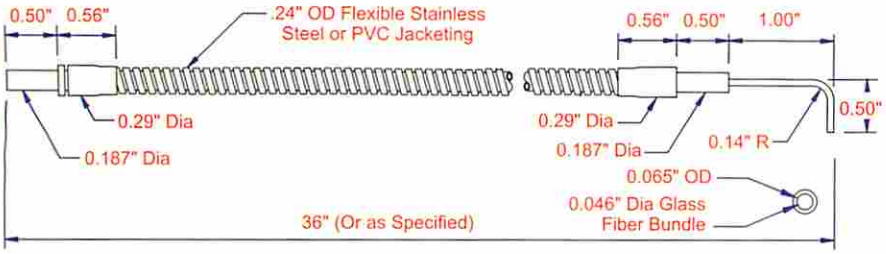

Right Angle Needle Tip
Stainless Steel Jacket

MODEL	BUNDLE SIZE
F-E-36R	.046"

PVC Monocoil Jacket

MODEL	BUNDLE SIZE
F-E-36RP	.046"

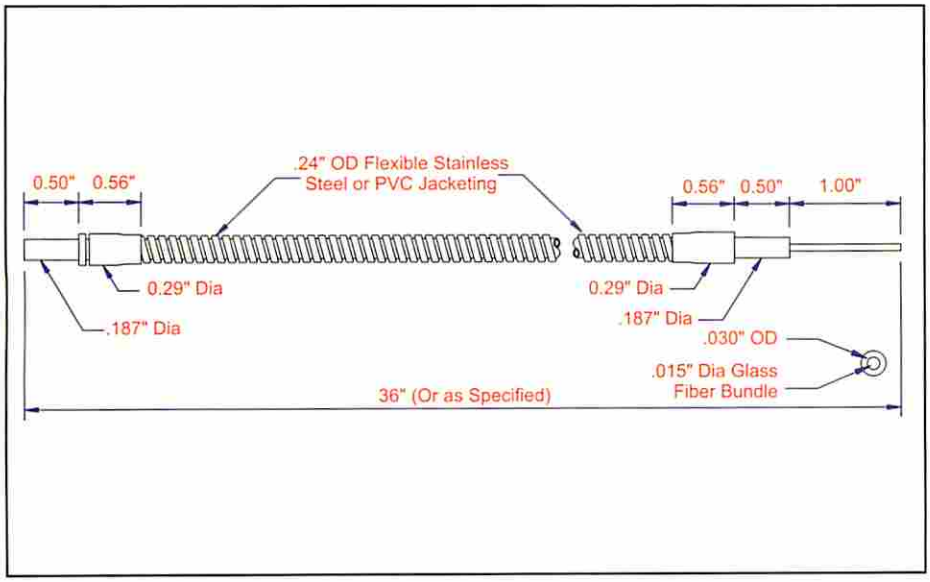

Straight Needle Tip
Stainless Steel Jacket

MODEL	BUNDLE SIZE
F-H-36	.015"

PVC Monocoil Jacket

MODEL	BUNDLE SIZE
F-H-36P	.015"

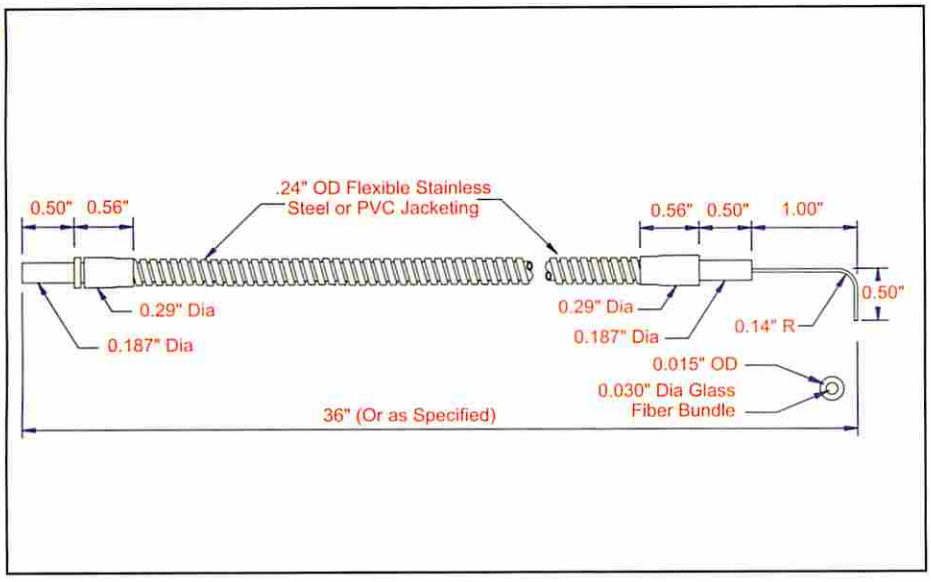

Right Angle Needle Tip
Stainless Steel Jacket

MODEL	BUNDLE SIZE
F-H-36R	.015"

PVC Monocoil Jacket

MODEL	BUNDLE SIZE
F-H-36RP	.015"

Straight Needle Tip
Stainless Steel Jacket

MODEL	BUNDLE SIZE
F-J-36	.027"

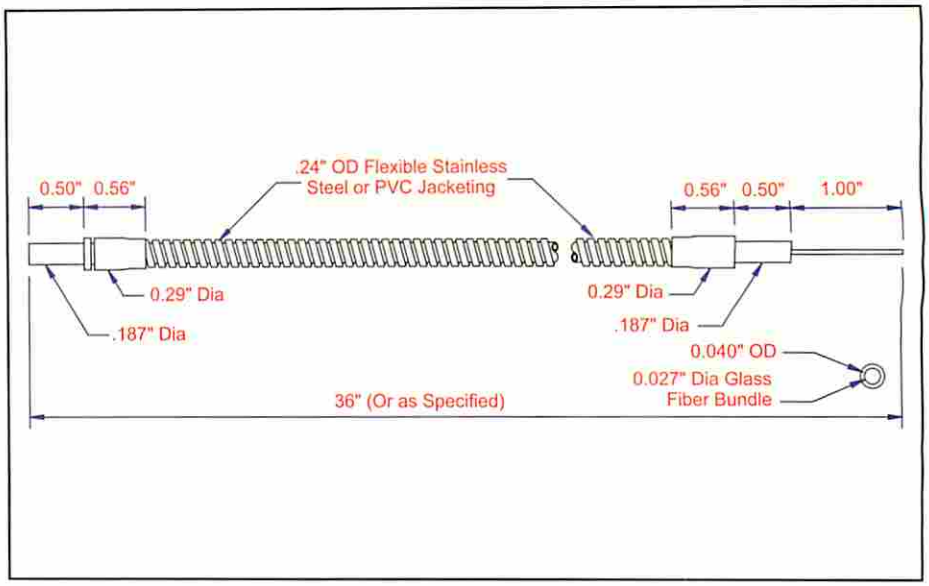

PVC Monocoil Jacket

MODEL	BUNDLE SIZE
F-J-36P	.027"

Right Angle Needle Tip
Stainless Steel Jacket

MODEL	BUNDLE SIZE
F-J-36R	.027"

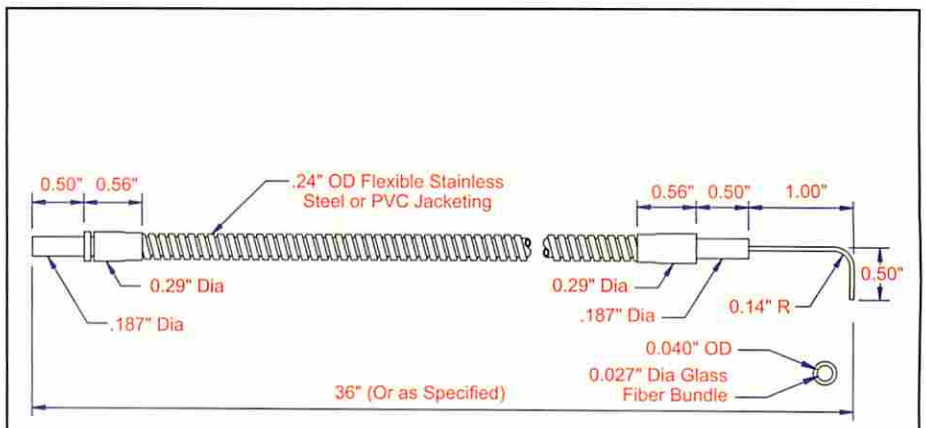

PVC Monocoil Jacket

MODEL	BUNDLE SIZE
F-J-36RP	.027"

Rectangular Flat Housing
Stainless Steel Jacket

MODEL	BUNDLE SIZE
F-C-36	.032" x .38"

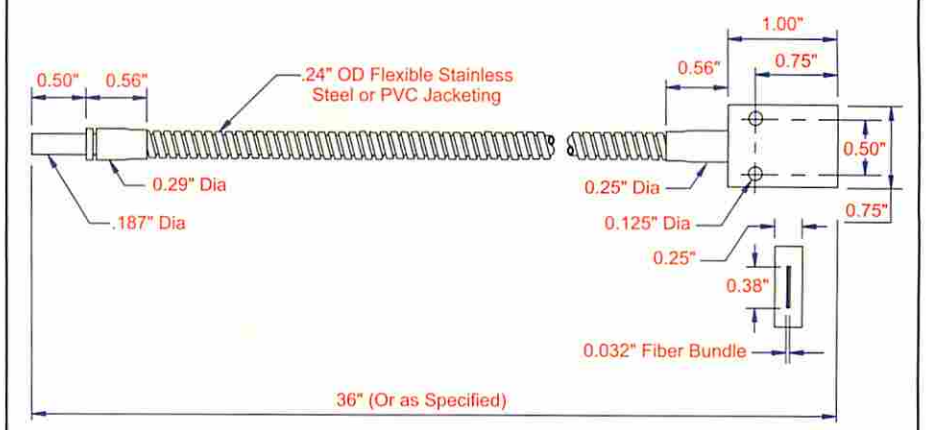

PVC Monocoil Jacket

MODEL	BUNDLE SIZE
F-C-36P	.032" x .38"

Glass Single Light Guides

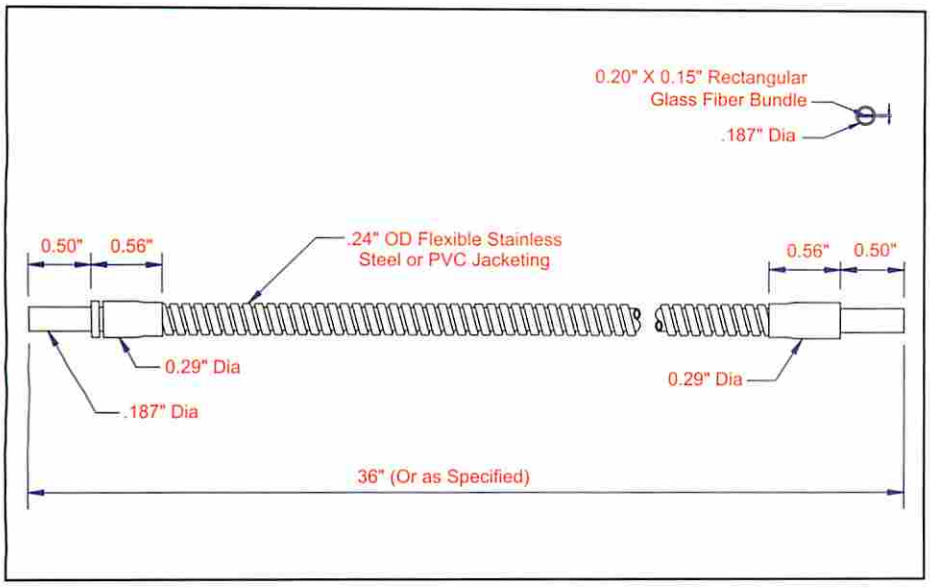

Rectangular Bundle Barrel Tip
Stainless Steel Jacket

MODEL	BUNDLE SIZE
F-K-36	.020" x .15"

PVC Monocoil Jacket

MODEL	BUNDLE SIZE
F-K-36P	.020" x .15"

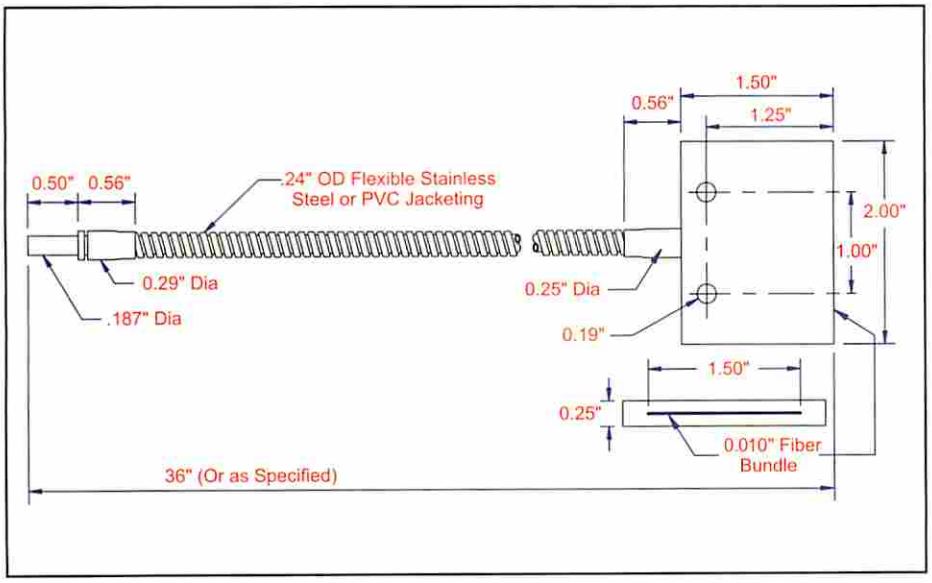

Rectangular 2" Flat Housing
Stainless Steel Jacket

MODEL	BUNDLE SIZE
F-P-36	.010" x 1.50"

PVC Monocoil Jacket

MODEL	BUNDLE SIZE
F-P-36P	.010" x 1.50"

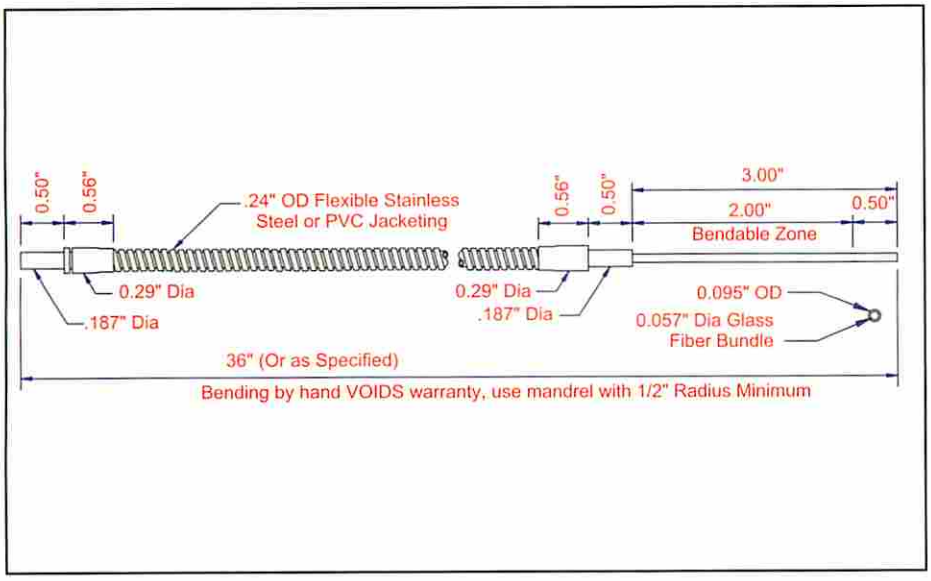

3" Long Bendable Tip
Stainless Steel Jacket

MODEL	BUNDLE SIZE
F-L-36B	.057"

PVC Monocoil Jacket

MODEL	BUNDLE SIZE
F-L-36BP	.057"

Glass Bifurcated Light Guides

Straight Barrel Tip
Stainless Steel Jacket

MODEL	BUNDLE SIZE
BF-A-36	.125"
BF-B-36A	.062"
BF-E-36A	.046"
BF-J-36A	.027"

PVC Monocoil Jacket

MODEL	BUNDLE SIZE
BF-A-36P	.125"
BF-B-36AP	.062"
BF-E-36AP	.046"
BF-J-36AP	.027"

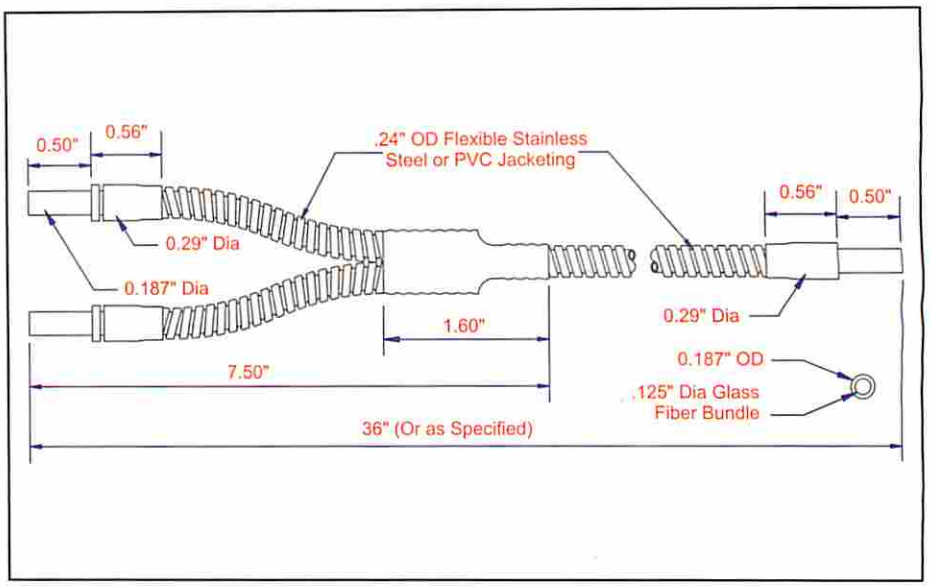

Right Angle Tip
Stainless Steel Jacket

MODEL	BUNDLE SIZE
BF-A-36R	.125"
BF-B-36AR	.062"
BF-E-36AR	.046"

PVC Monocoil Jacket

MODEL	BUNDLE SIZE
BF-A-36RP	.125"
BF-B-36ARP	.062"
BF-E-36ARP	.046"

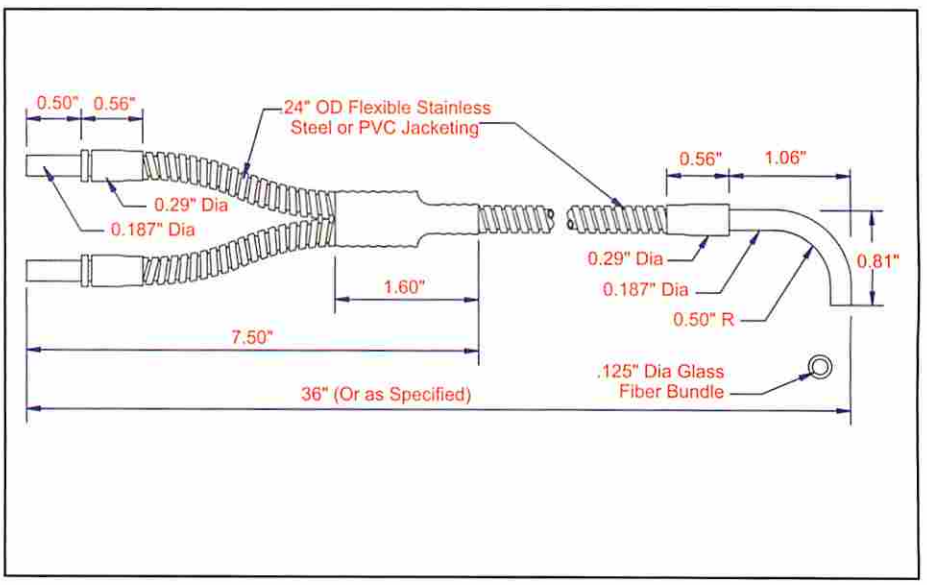

Right Angle Tip,
then Threaded
Stainless Steel Jacket

MODEL	BUNDLE SIZE
BF-A-36RT	.125"
BF-B-36RT	.062"
BF-E-36RT	.046"

PVC Monocoil Jacket

MODEL	BUNDLE SIZE
BF-A-36RTP	.125"
BF-B-36RTP	.062"
BF-E-36RTP	.046"

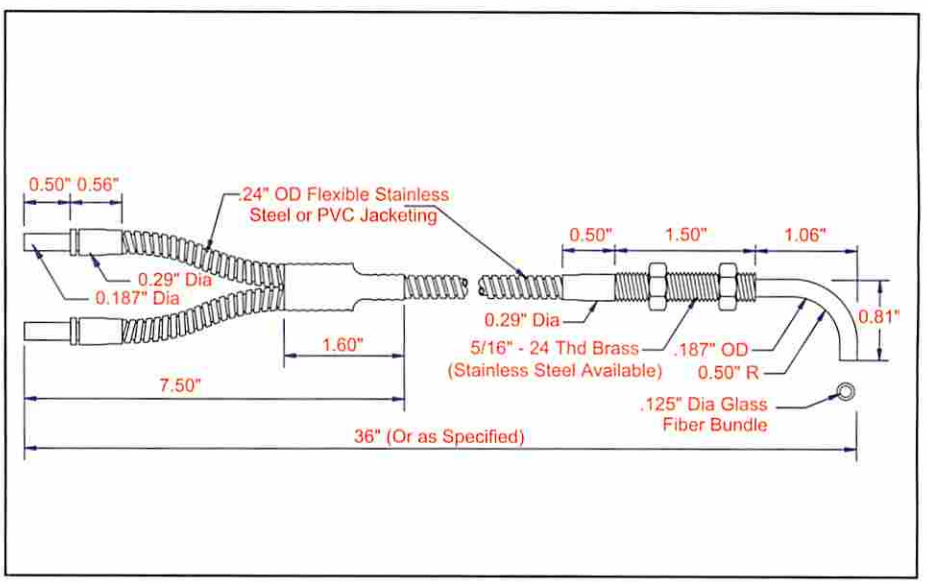

Glass Bifurcated Light Guides

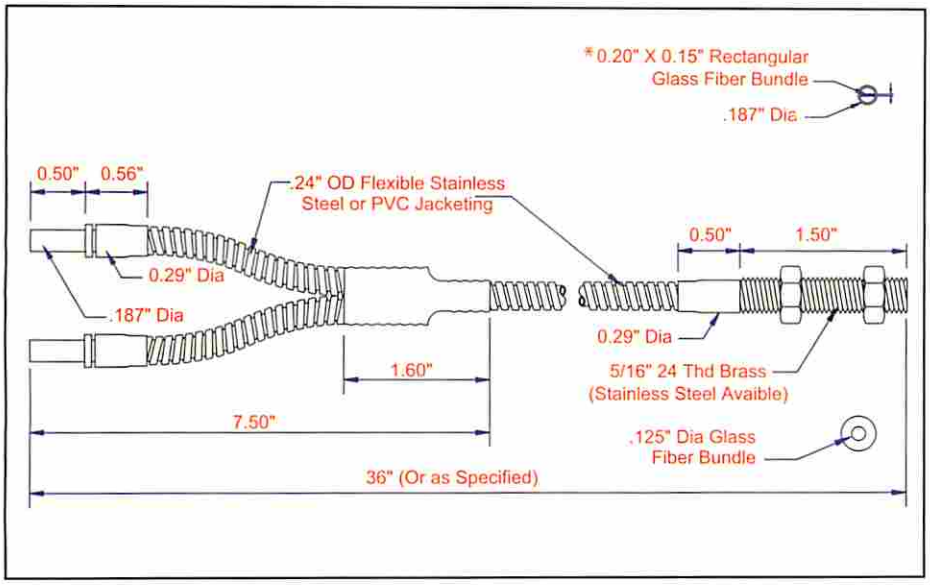

Straight Threaded Tip
Stainless Steel Jacket

MODEL	BUNDLE SIZE
BF-A-36T	.125"
BF-B-36T	.062"
BF-E-36T	.046"
BF-J-36T	.027"
* BF-K-36T	.020" x .15"

PVC Monocoil Jacket

MODEL	BUNDLE SIZE
BF-A-36TP	.125"
BF-B-36TP	.062"
BF-E-36TP	.046"
BF-J-36TP	.027"
* BF-K-36TP	.020" x .15"

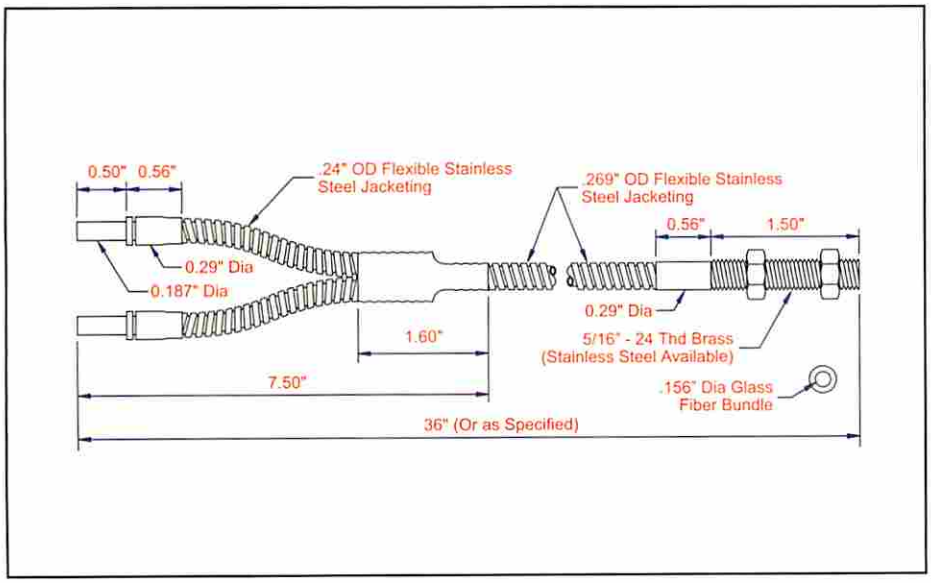

Straight Threaded Tip
Stainless Steel Jacket
Micro Polished for Superior Performance and Range

MODEL	BUNDLE SIZE
BF-U-36TUV	.156"

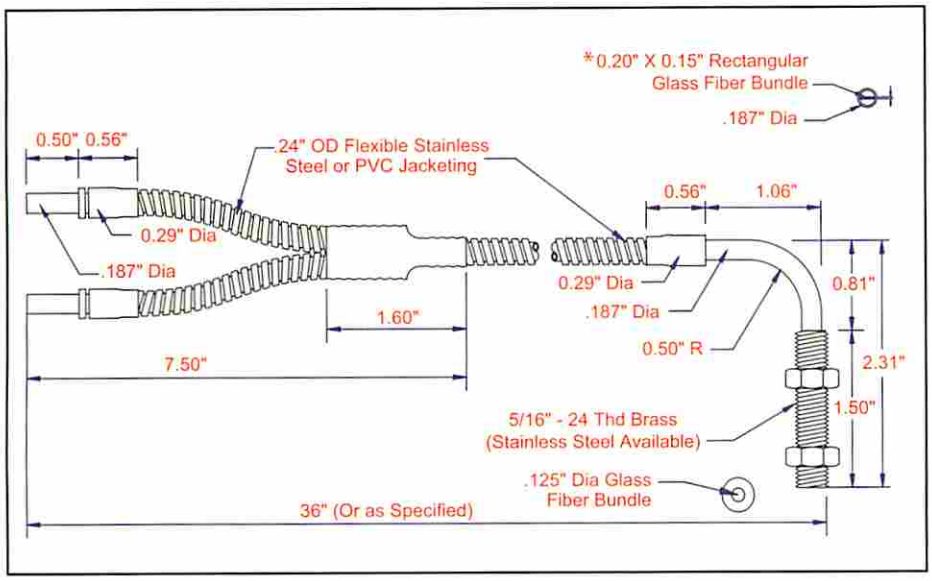

Threaded Tip, then Right Angle
Stainless Steel Jacket

MODEL	BUNDLE SIZE
BF-A-36TR	.125"
BF-B-36TR	.062"
BF-E-36TR	.046"
* BF-K-36TR	.020" x .15"

PVC Monocoil Jacket

MODEL	BUNDLE SIZE
BF-A-36TRP	.125"
BF-B-36TRP	.062"
BF-E-36TRP	.046"
* BF-K-36TRP	.020" x .15"

Glass Bifurcated Light Guides

Side View, Right Angle Tip
Stainless Steel Jacket

MODEL	BUNDLE SIZE
BF-A-36RS	.093"

PVC Monocoil Jacket

MODEL	BUNDLE SIZE
BF-A-36RSP	.093"

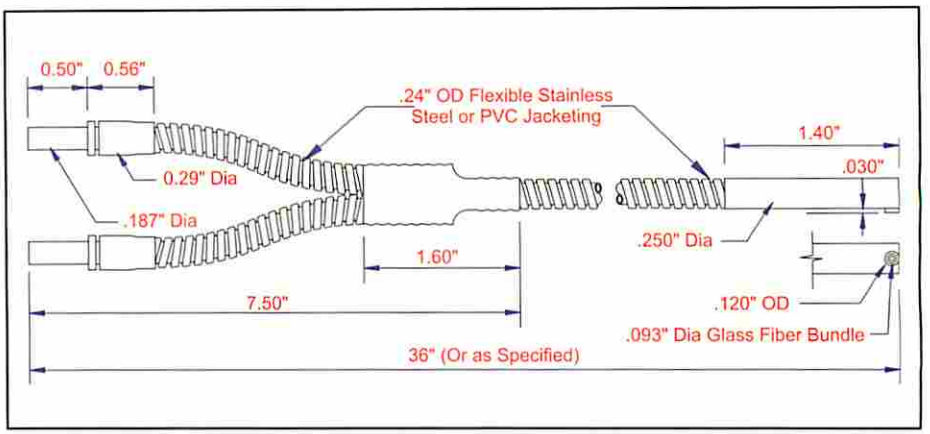

Side View, Right Angle Threaded, Stainless Steel Jacket

MODEL	BUNDLE SIZE
BF-A-36RST	.093"

PVC Monocoil Jacket

MODEL	BUNDLE SIZE
BF-A-36RSTP	.093"

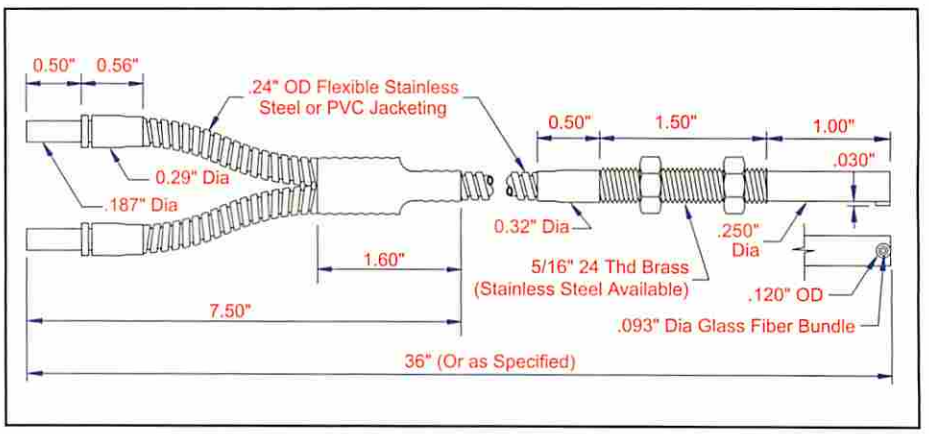

Straight Needle Tip
Stainless Steel Jacket

MODEL	BUNDLE SIZE
BF-B-36	.062"

PVC Monocoil Jacket

MODEL	BUNDLE SIZE
BF-B-36P	.062"

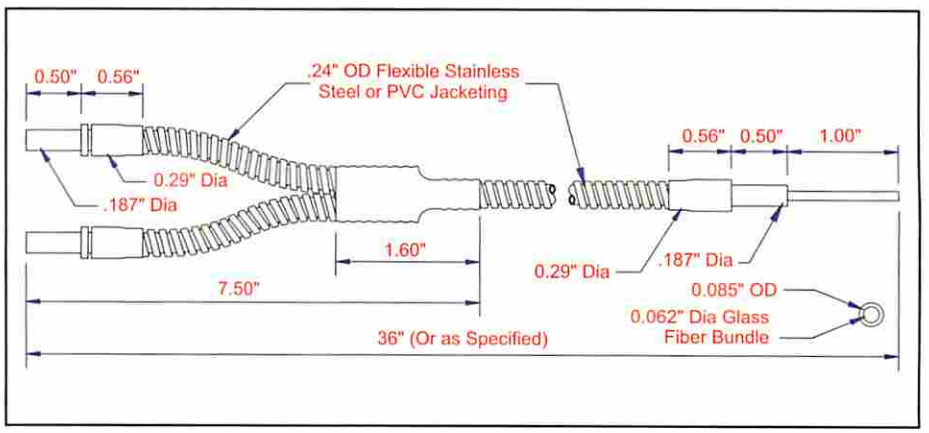

Right Angle Needle Tip
Stainless Steel Jacket

MODEL	BUNDLE SIZE
BF-B-36R	.062"

PVC Monocoil Jacket

MODEL	BUNDLE SIZE
BF-B-36RP	.062"

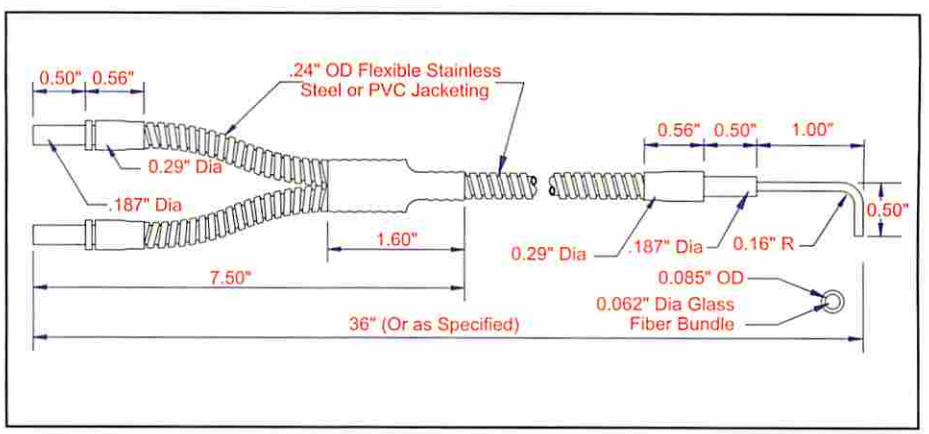

Glass Bifurcated Light Guides

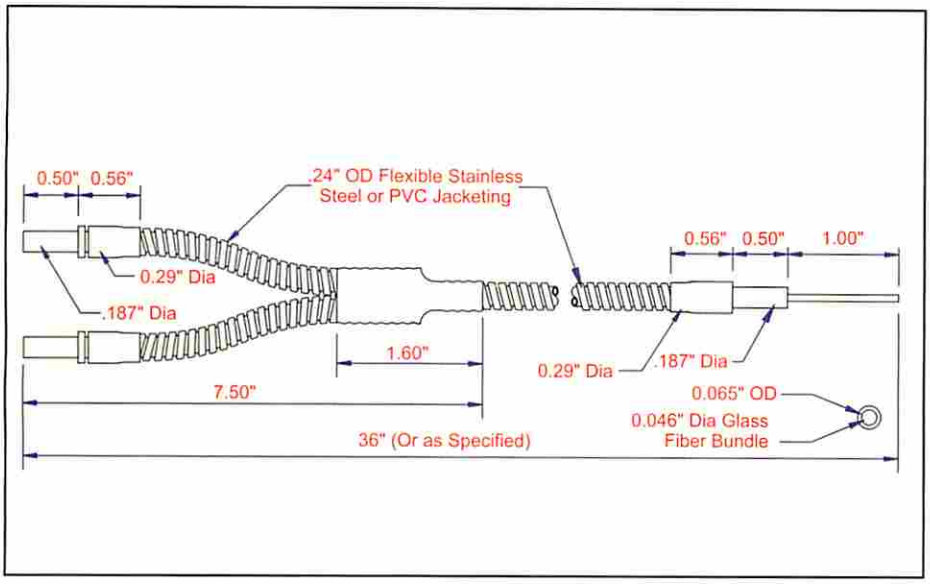

Straight Needle Tip
Stainless Steel Jacket

MODEL	BUNDLE SIZE
BF-E-36	.046"

PVC Monocoil Jacket

MODEL	BUNDLE SIZE
BF-E-36P	.046"

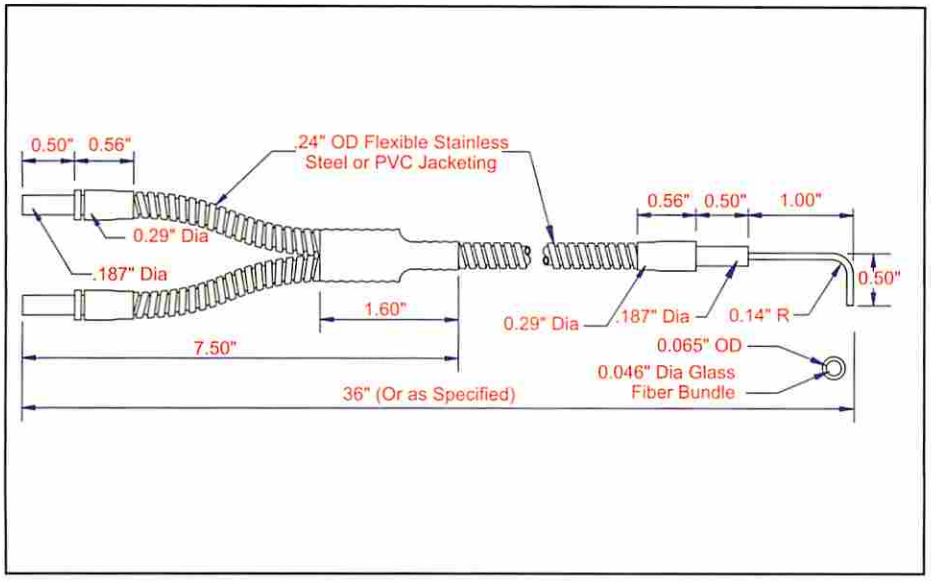

Right Angle Needle Tip
Stainless Steel Jacket

MODEL	BUNDLE SIZE
BF-E-36R	.046"

PVC Monocoil Jacket

MODEL	BUNDLE SIZE
BF-E-36RP	.046"

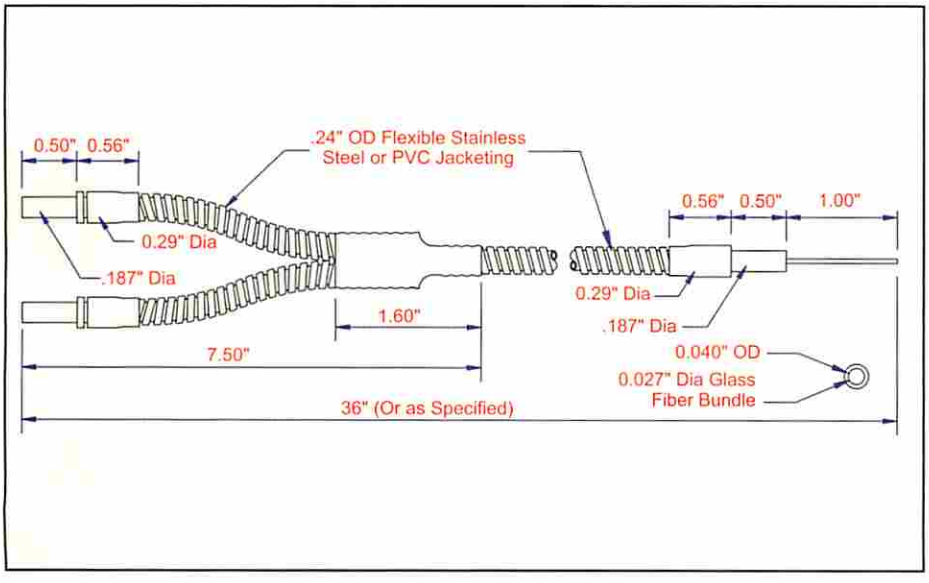

Straight Needle Tip
Stainless Steel Jacket

MODEL	BUNDLE SIZE
BF-J-36	.027"

PVC Monocoil Jacket

MODEL	BUNDLE SIZE
BF-J-36P	.027"

Right Angle Needle Tip
Stainless Steel Jacket

MODEL	BUNDLE SIZE
BF-J-36R	.027"

PVC Monocoil Jacket

MODEL	BUNDLE SIZE
BF-J-36RP	.027"

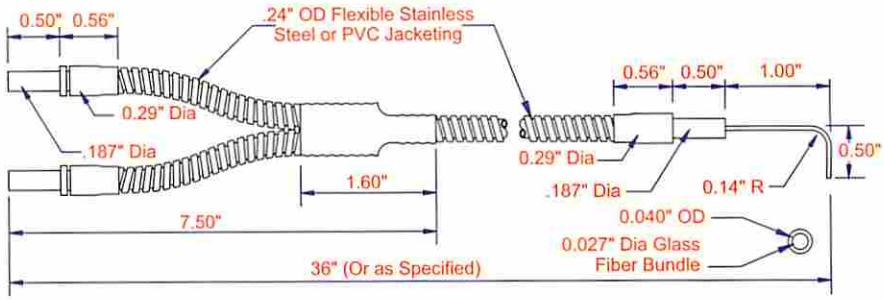

Rectangular Flat Housing
Stainless Steel Jacket

MODEL	BUNDLE SIZE
BF-C-36	.032" x .38"

PVC Monocoil Jacket

MODEL	BUNDLE SIZE
BF-C-36P	.032" x .38"

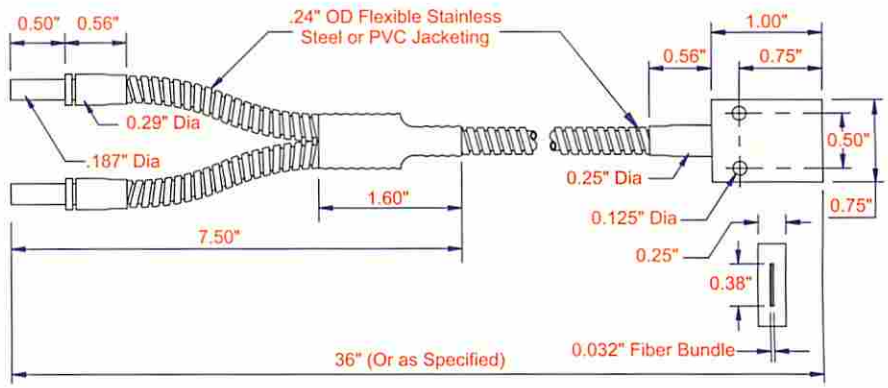

Rectangular Bundle Barrel Tip
Stainless Steel Jacket

MODEL	BUNDLE SIZE
BF-K-36	.020" x .15"

PVC Monocoil Jacket

MODEL	BUNDLE SIZE
BF-K-36P	.020" x .15"

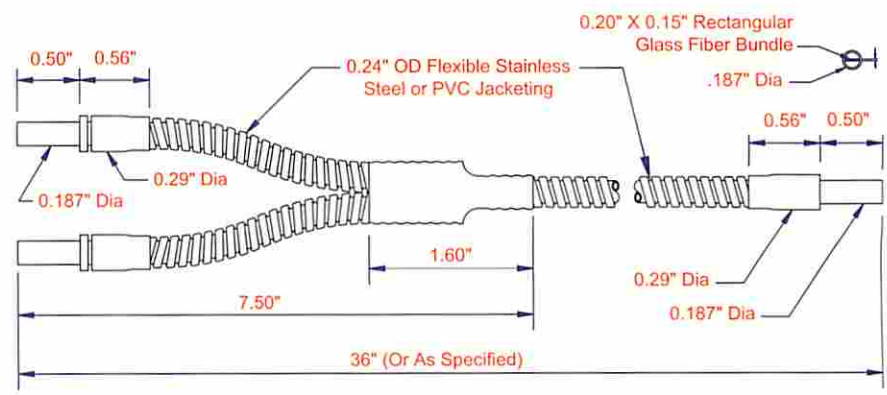

Glass Bifurcated Light Guides

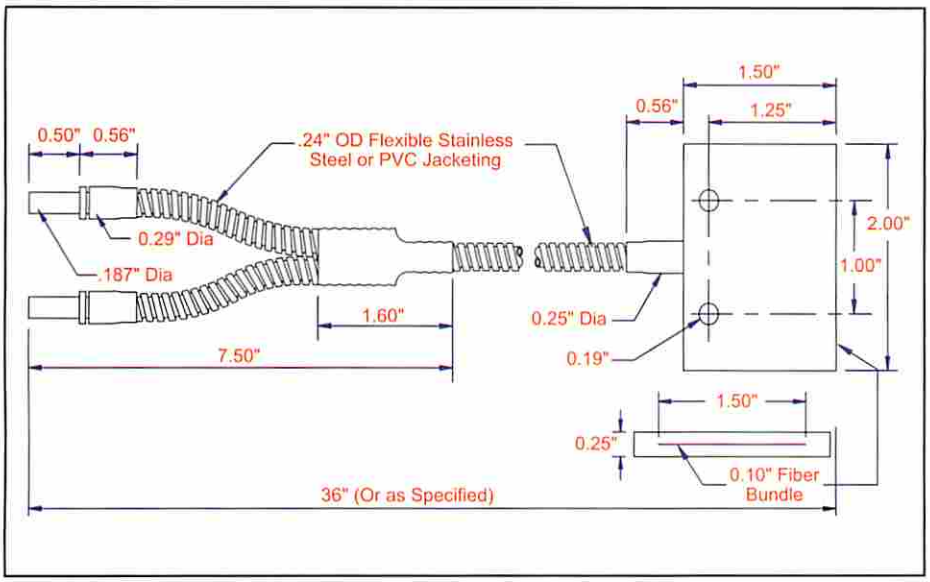

Rectangular, 2" Flat Housing
Stainless Steel Jacket

MODEL	BUNDLE SIZE
BF-P-36	.010" x 1.50"

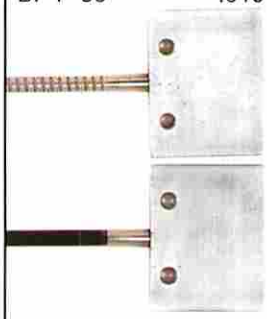

PVC Monocoil Jacket

MODEL	BUNDLE SIZE
BF-P-36P	.010" x 1.50"

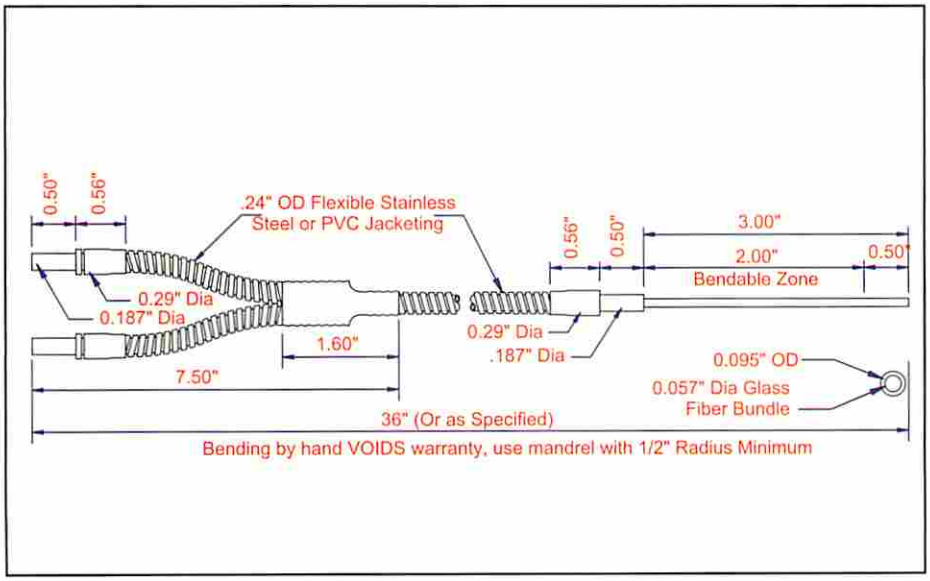

3" Long Bendable Tip
Stainless Steel Jacket

MODEL	BUNDLE SIZE
BF-L-36B	.057"

PVC Monocoil Jacket

MODEL	BUNDLE SIZE
BF-L-36BP	.057"

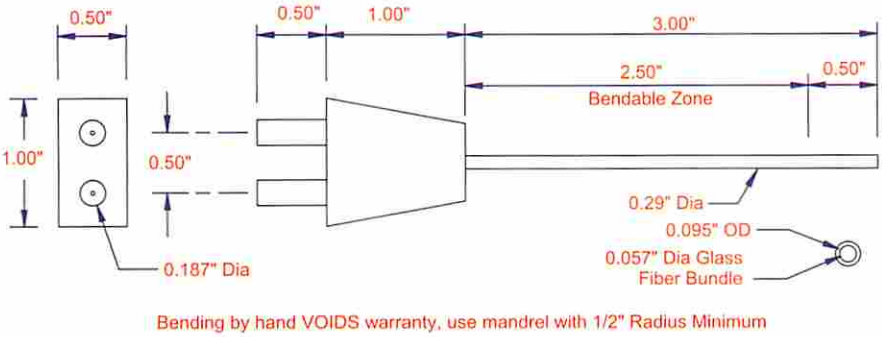

Sensor Adaptor
Bendable 3" Tip
For use with
F1 Optical Block

MODEL	BUNDLE SIZE
BF-L-3B	.057"

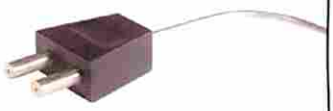

Miniature Glass Single Light Guides

Our **MINIATURE GLASS FIBEROPTIC LIGHT GUIDES** utilize the high performance and protection of glass fibers with the space saving flexibility of plastic fibers, plus a tighter bend radius. ***Now there is nowhere we can't take you.***

Stainless Steel Jacket

MODEL	BUNDLE SIZE
MF-A-36T	.090"

PVC Monocoil Jacket

MODEL	BUNDLE SIZE
MF-B-36TP	.062"

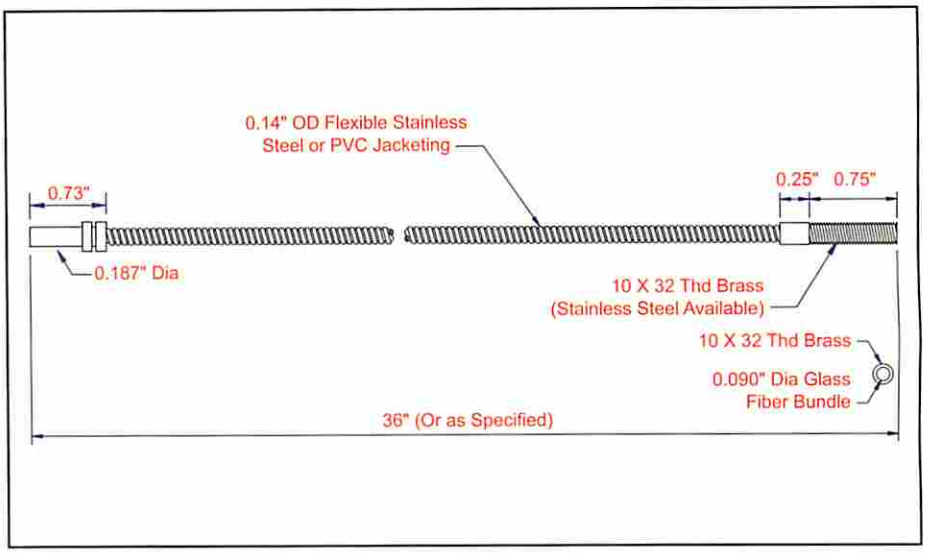

Stainless Steel Jacket

MODEL	BUNDLE SIZE
MF-B-36RT	.062"

PVC Monocoil Jacket

MODEL	BUNDLE SIZE
MF-B-36RTP	.062"

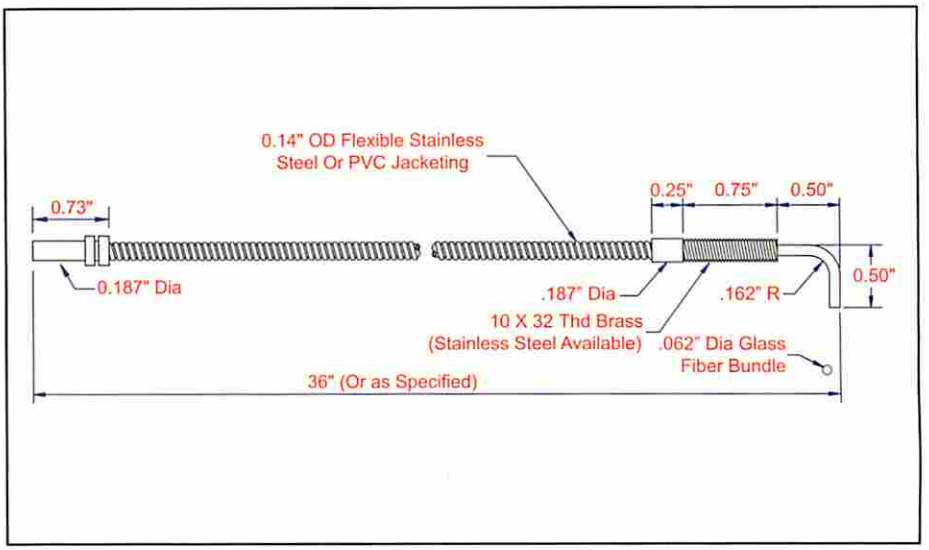

Stainless Steel Jacket

MODEL	BUNDLE SIZE
MF-B-36TR	.062"

PVC Monocoil Jacket

MODEL	BUNDLE SIZE
MF-B-36TRP	.062"

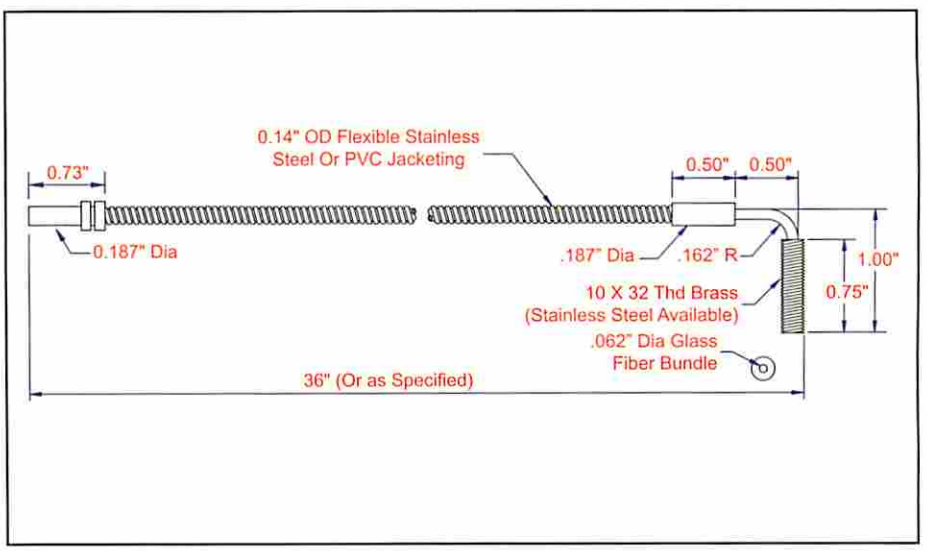

Miniature Glass Single Light Guides

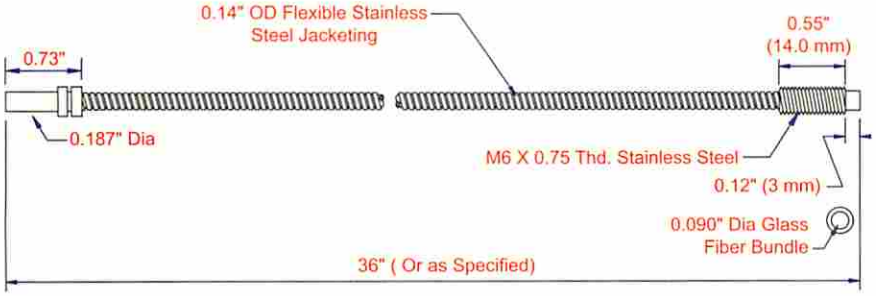

Stainless Steel Jacket

MODEL	BUNDLE SIZE
MF-A-36TM6	.090"

PVC Monocoil Jacket

MODEL	BUNDLE SIZE
MF-B-36TM6P	.062"

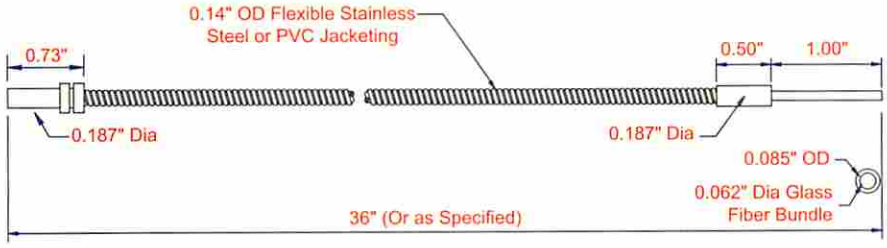

Stainless Steel Jacket

MODEL	BUNDLE SIZE
MF-B-36	.062"

PVC Monocoil Jacket

MODEL	BUNDLE SIZE
MF-B-36P	.062"

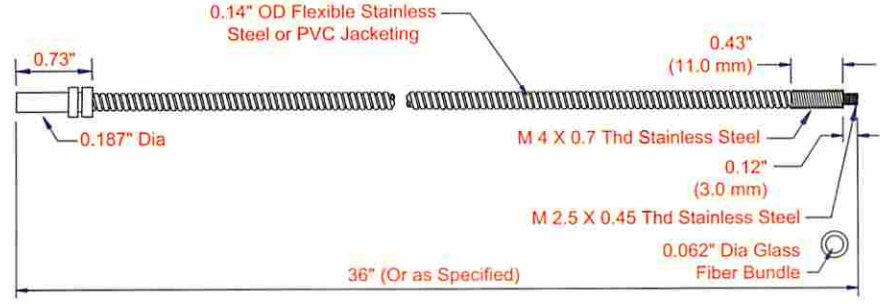

Stainless Steel Jacket

MODEL	BUNDLE SIZE
MF-B-36TM4	.062"

PVC Monocoil Jacket

MODEL	BUNDLE SIZE
MF-B-36TM4P	.062"

Miniature Glass Single Light Guides

Side View, Right Angle, Threaded, Stainless Steel Jacket

MODEL	BUNDLE SIZE
MF-B-36RS	.062"

PVC Monocoil Jacket

MODEL	BUNDLE SIZE
MF-B-36RSP	.062"

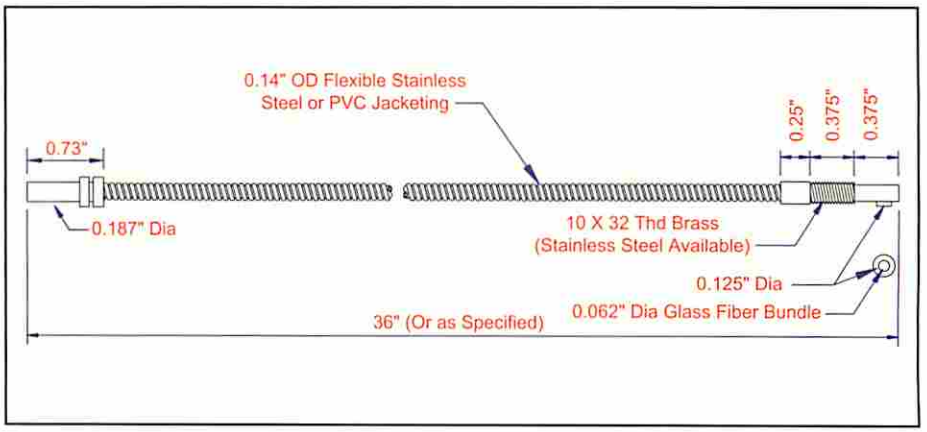

Rectangular Flat Housing Stainless Steel Jacket

MODEL	BUNDLE SIZE
MF-C-36	0.250" X 0.025"

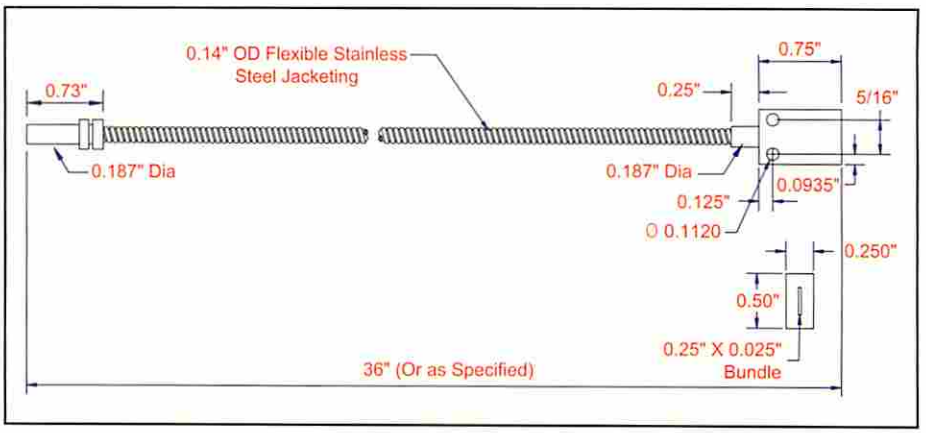

Stainless Steel Jacket

MODEL	BUNDLE SIZE
MF-E-36	.046"

PVC Monocoil Jacket

MODEL	BUNDLE SIZE
MF-E-36P	.046"

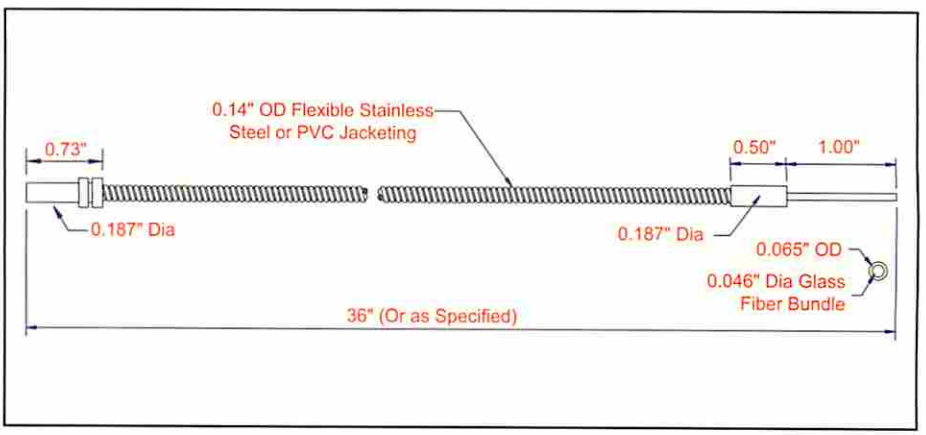

Stainless Steel Jacket

MODEL	BUNDLE SIZE
MF-J-36	.027"

PVC Monocoil Jacket

MODEL	BUNDLE SIZE
MF-J-36P	.027"

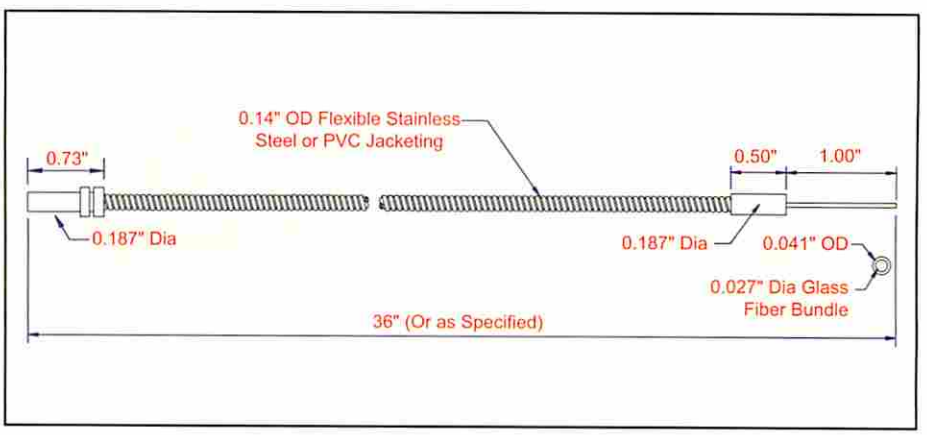

FINALLY... BIFURCATED FIBEROPTIC LIGHT GUIDES

in a small package with the performance of glass

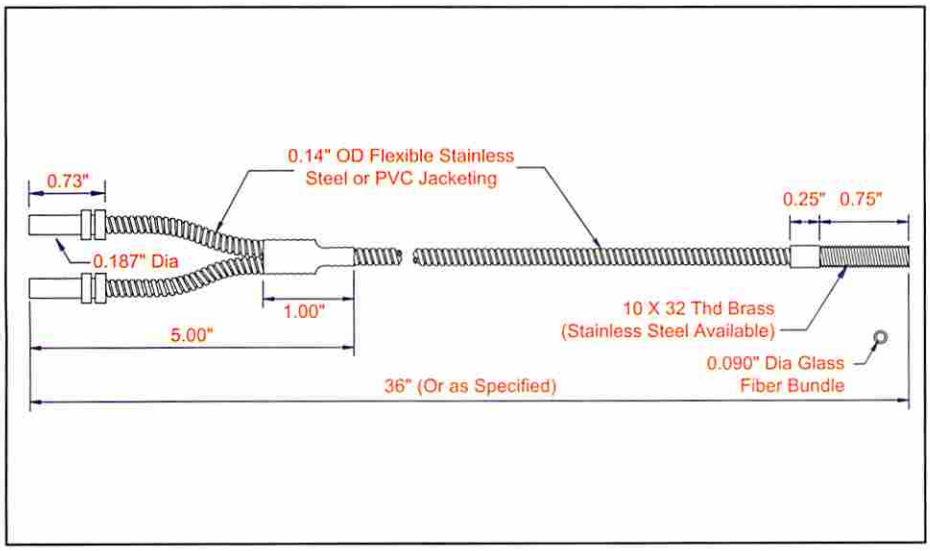

Stainless Steel Jacket

MODEL	BUNDLE SIZE
MBF-A-36T	.090"
MBF-B-36T	.062"

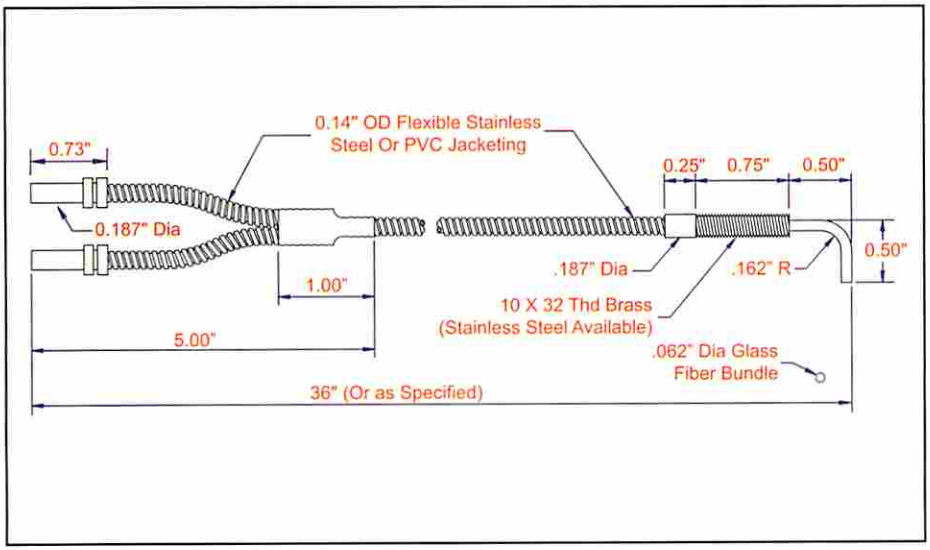

Stainless Steel Jacket

MODEL	BUNDLE SIZE
MBF-B-36RT	.062"

PVC Monocoil Jacket

MODEL	BUNDLE SIZE
MBF-B-36RTP	.062"

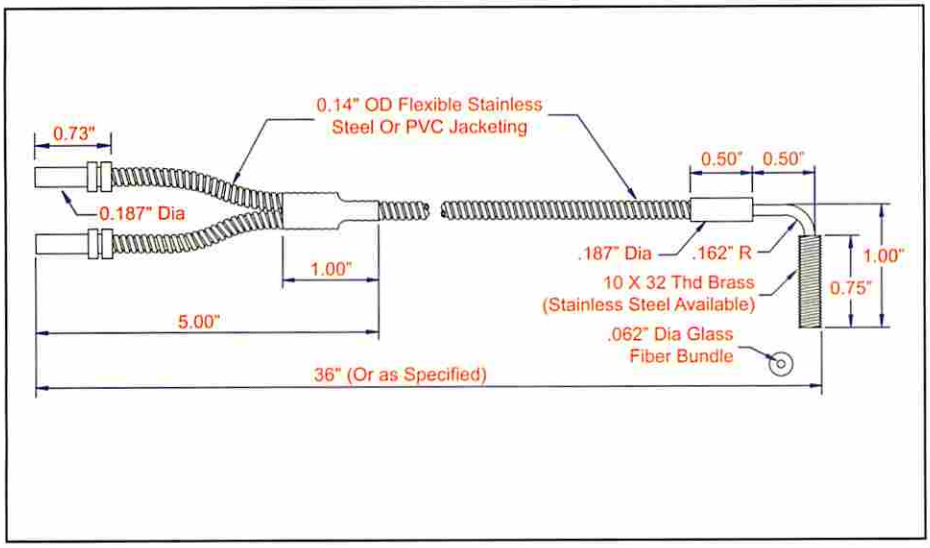

Stainless Steel Jacket

MODEL	BUNDLE SIZE
MBF-B-36TR	.062"

PVC Monocoil Jacket

MODEL	BUNDLE SIZE
MBF-B-36TRP	.062"

Miniature Glass Bifurcated Light Guides

Stainless Steel Jacket

MODEL	BUNDLE SIZE
MBF-A-36TM6	.090"

PVC Monocoil Jacket

MODEL	BUNDLE SIZE
MBF-B-36TM6P	.062"

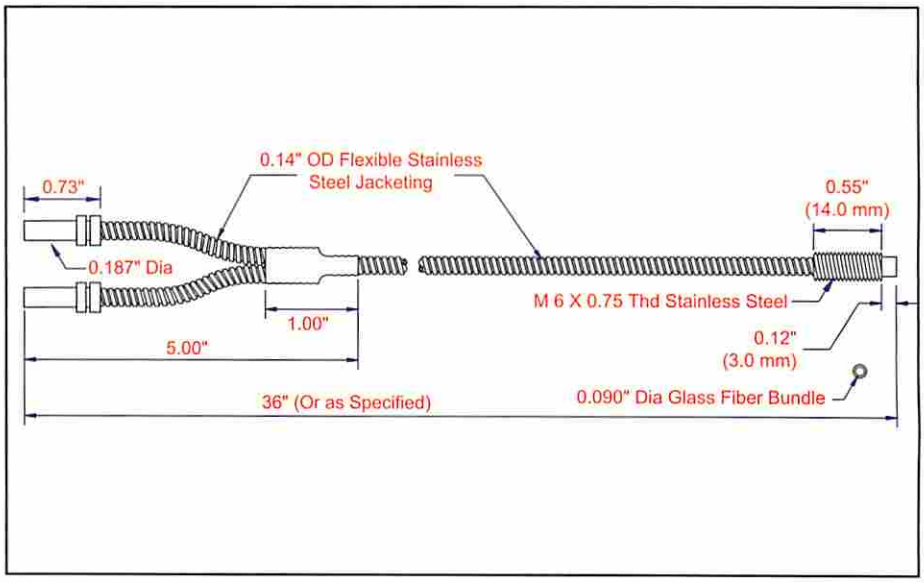

Stainless Steel Jacket

MODEL	BUNDLE SIZE
MBF-B-36	062"

PVC Monocoil Jacket

MODEL	BUNDLE SIZE
MBF-B-36P	062"

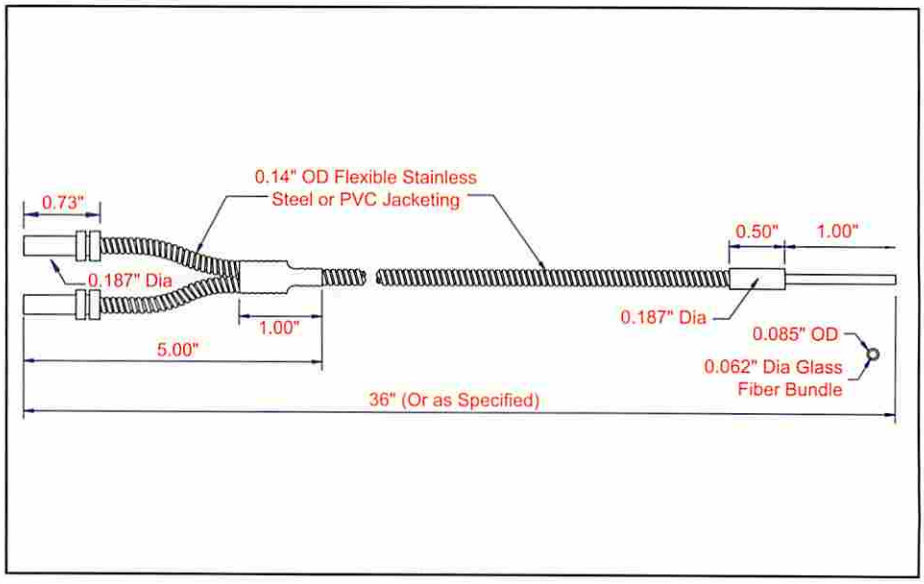

Stainless Steel Jacket

MODEL	BUNDLE SIZE
MBF-B-36TM4	.062"

PVC Monocoil Jacket

MODEL	BUNDLE SIZE
MBF-B-36TM4P	062"

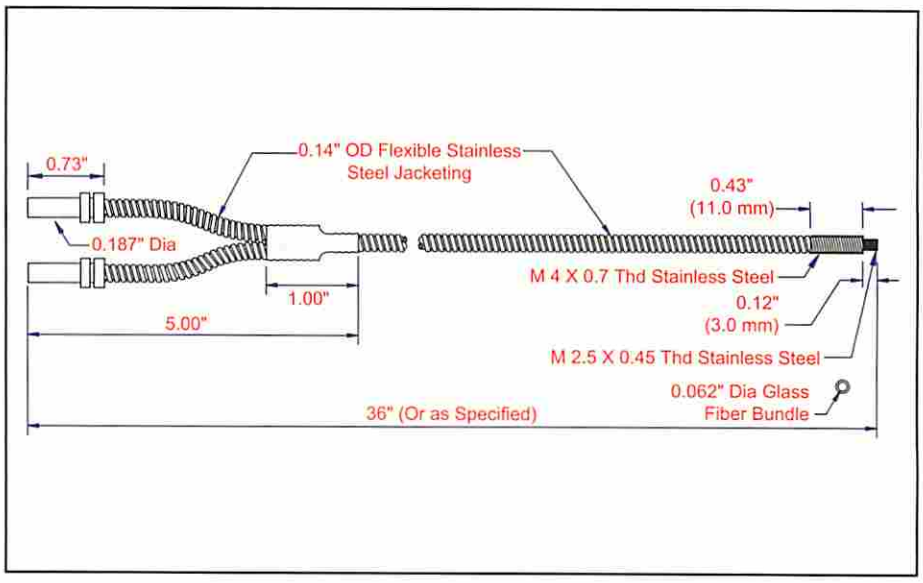

Miniature Glass Bifurcated Light Guides

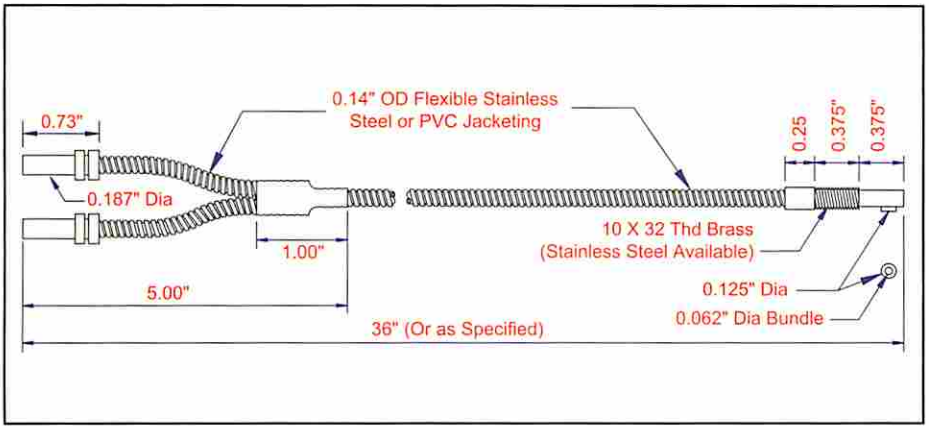

Stainless Steel Jacket

MODEL	BUNDLE SIZE
MBF-B-36RS	.062"

PVC Monocoil Jacket

MODEL	BUNDLE SIZE
MBF-B-36RSP	.062"

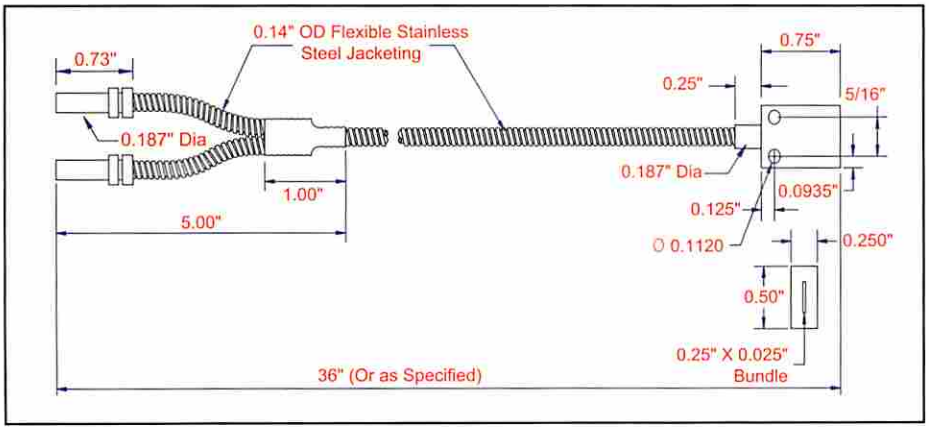

Rectangular Flat Housing Stainless Steel Jacket

MODEL	BUNDLE SIZE
MBF-C-36	0.250" X 0.025"

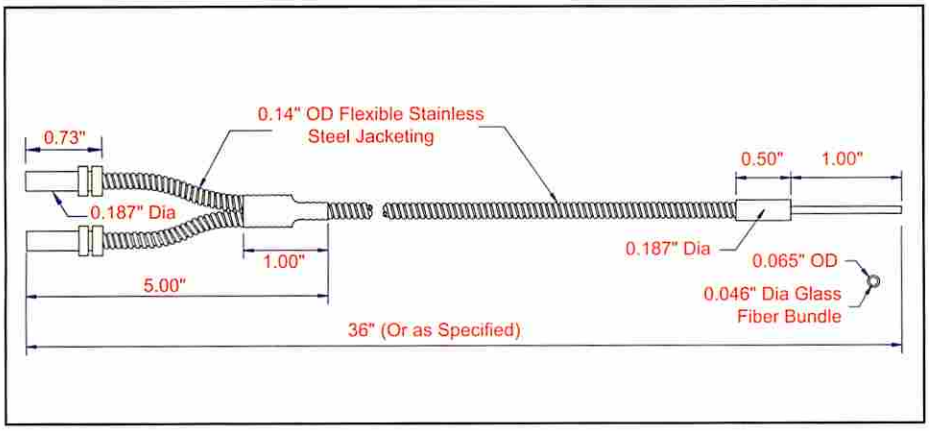

Stainless Steel Jacket

MODEL	BUNDLE SIZE
MBF-E-36	.046"

PVC Monocoil Jacket

MODEL	BUNDLE SIZE
MBF-E-36P	.046"

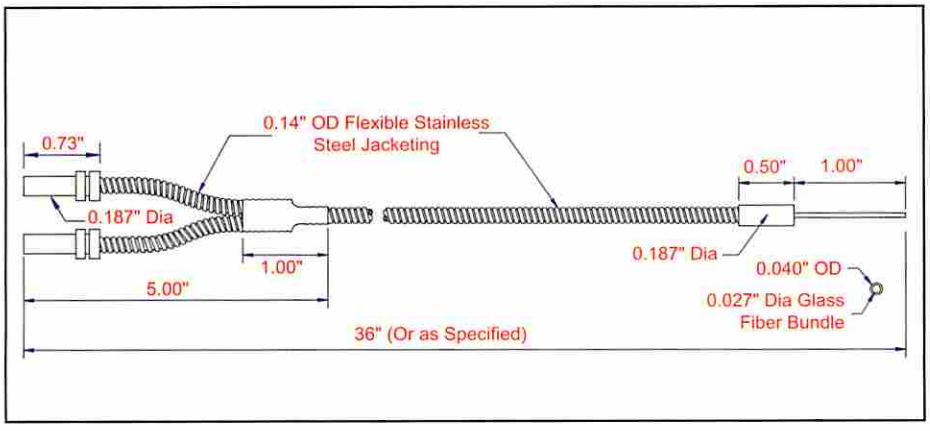

Stainless Steel Jacket

MODEL	BUNDLE SIZE
MBF-J-36	.027"

PVC Monocoil Jacket

MODEL	BUNDLE SIZE
MBF-J-36P	.027"

Plastic Single Light Guides

All Plastic Fibers are priced per package.
Plastic Single Light Guides have two per package.

Straight Threaded Tip

MODEL	BUNDLE SIZE
PF-Z-78TL	.040"

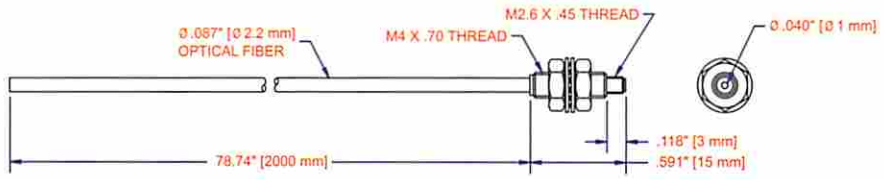

Straight Threaded Tip

MODEL	BUNDLE SIZE
PF-Q-78T	.020"

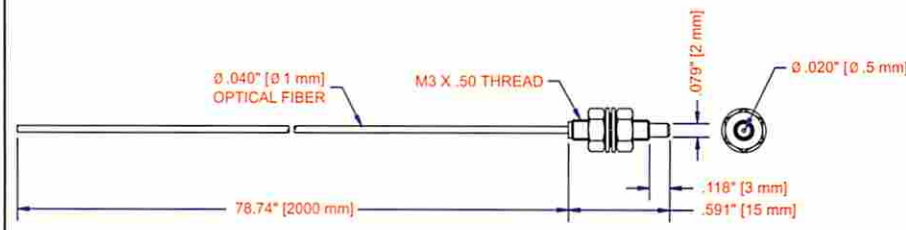

Threaded Tip then Right Angle

MODEL	BUNDLE SIZE
PF-Z-78TRL	.040"

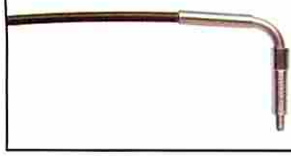

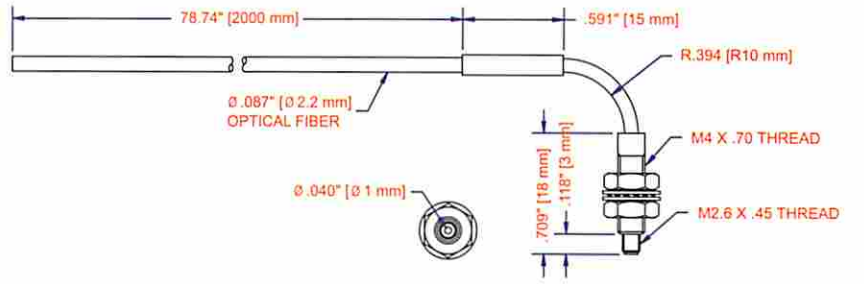

Straight Threaded Needle Tip

MODEL	BUNDLE SIZE
PF-Z-78T70	.040"

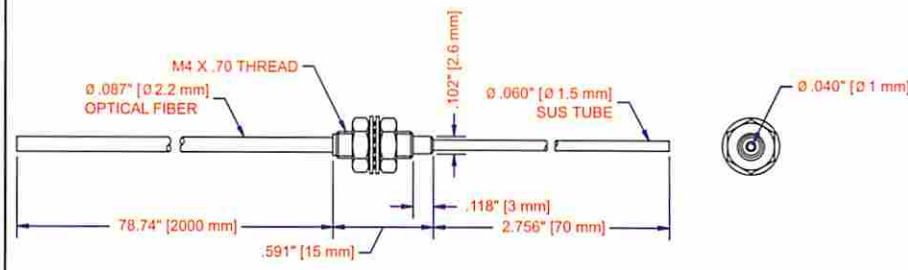

Straight Needle Tip with Threaded Mounting

MODEL	BUNDLE SIZE
PF-Q-78T70	.020"

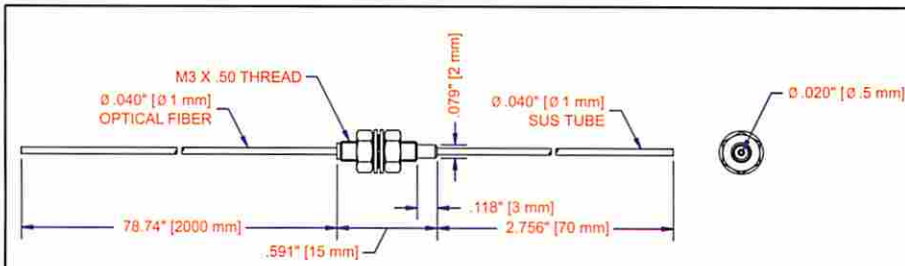

Plastic Single Light Guides

All Plastic Fibers are priced per package.
Plastic Single Light Guides have two per package.

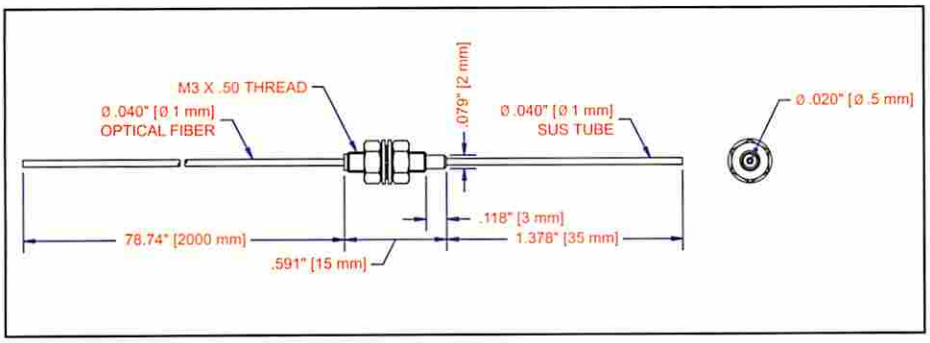

Straight Needle Tip with Threaded Mounting

MODEL	BUNDLE SIZE
PF-Q-78T35	.020"

Range Guidelines with Red LED

PF-Z-78TL, PF-Z-78T70

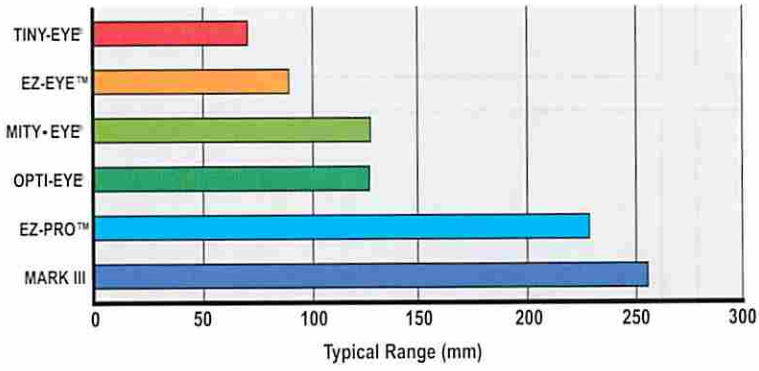

PF-Q-78T, PF-Q-78T35, PF-Q-78T70

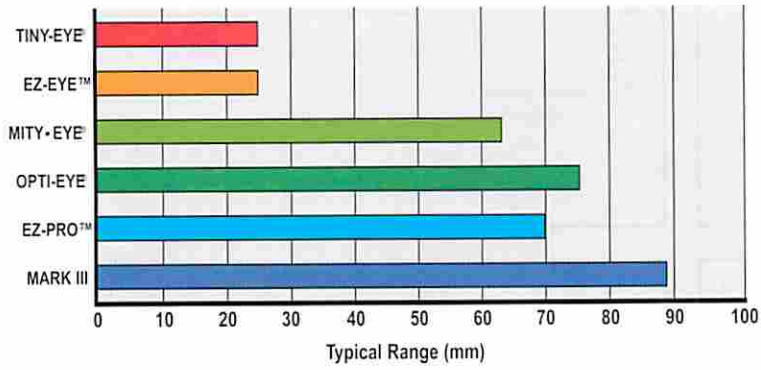

PF-Z-78TRL

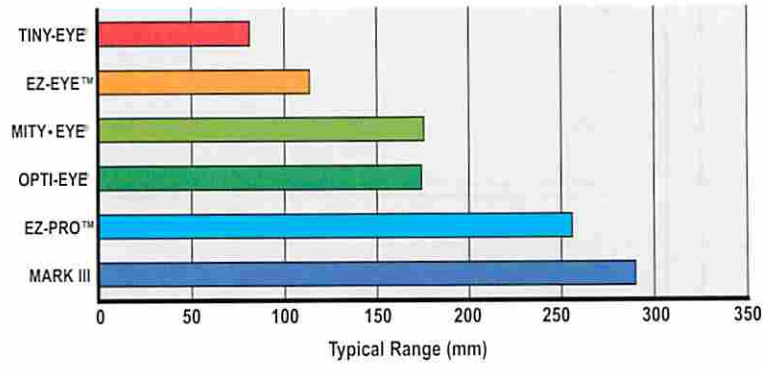

Drawing available at ttco.com

Plastic Single Light Guides

All Plastic Fibers are priced per package.
Plastic Single Light Guides have two per package.

Slip-on Barrel
Lens 1/4" x 1"

MODEL	BUNDLE SIZE
LF-G-36	.040" 36" Cable Length
LF-G-72	.040" 72" Cable Length

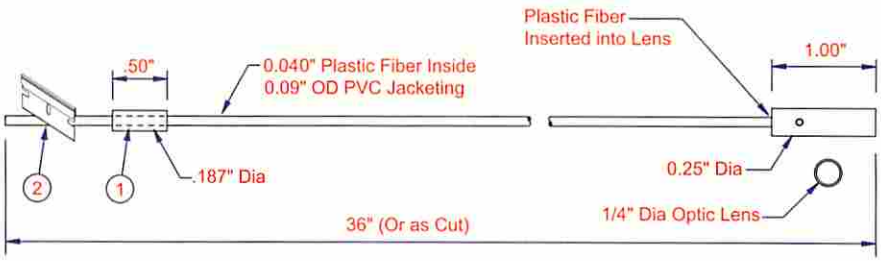

(1) NFA-50 (Removable Nylon Fiber Optic Block Adaptor)

(2) Fibers can be cut to length using the PFC-1
Note: Cut Must Be Perpendicular to Fiber

Slip-on Threaded Barrel
Lens 3/8" x 1"

MODEL	BUNDLE SIZE
LF-H-36	.040" 36" Cable Length
LF-H-72	.040" 72" Cable Length

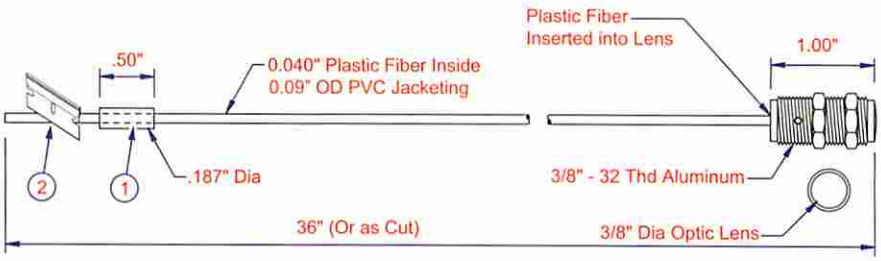

(1) NFA-50 (Removable Nylon Fiber Optic Block Adaptor)

(2) Fibers can be cut to length using the PFC-1
Note: Cut Must Be Perpendicular to Fiber

Plastic Fibers
Right Angle

MODEL	BUNDLE SIZE
F-S-72R	.040"
F-S-120R	

Low cost, right angle plastic fiberoptic light guides offer the most reliable sensing mode for opaque objects. Wide beam simplifies alignment. **72" or 120" long cut-to-length fibers.**

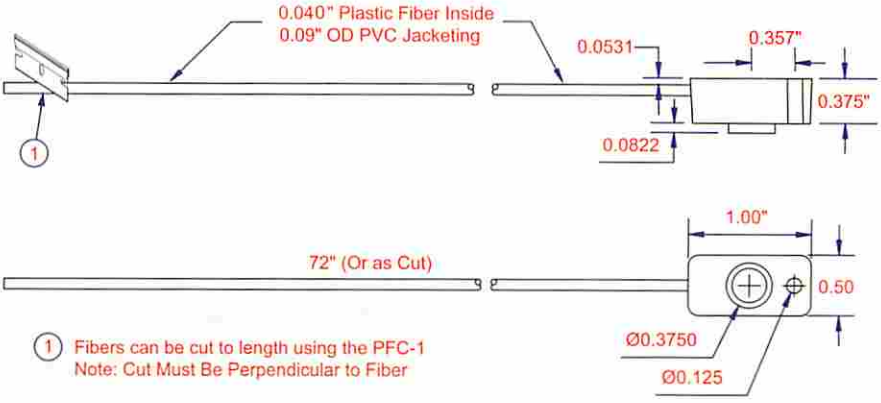

(1) Fibers can be cut to length using the PFC-1
Note: Cut Must Be Perpendicular to Fiber

Plastic Diplex Light Guides

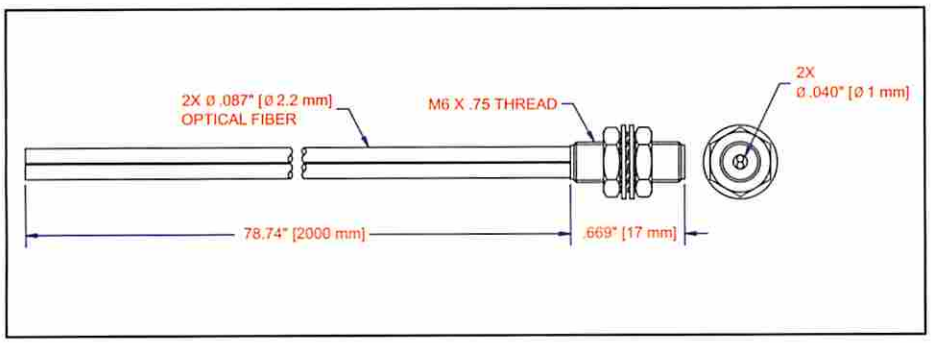

Threaded Tip

MODEL	BUNDLE SIZE
PFD-Z-78M6	.040"

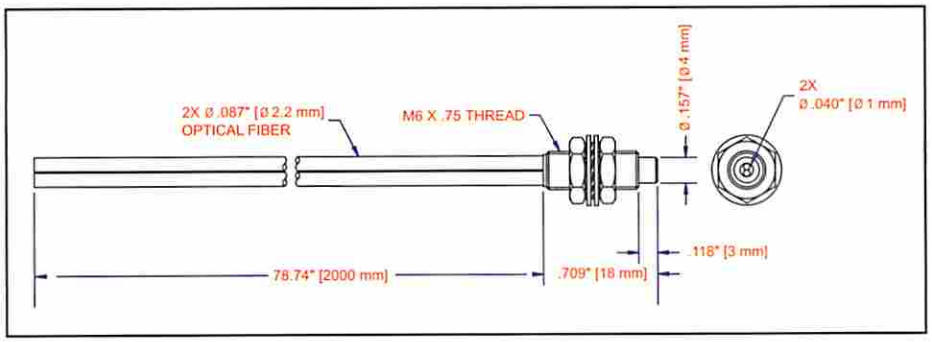

Threaded Tip

MODEL	BUNDLE SIZE
PFD-Z-78M6	.040"

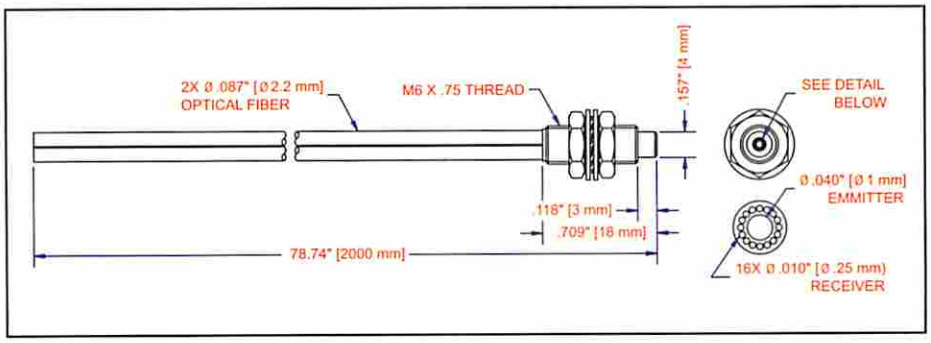

Coaxial Threaded Tip

MODEL	BUNDLE SIZE
PFD-CZ-78T	Emitter: .040" Receiver: .010"

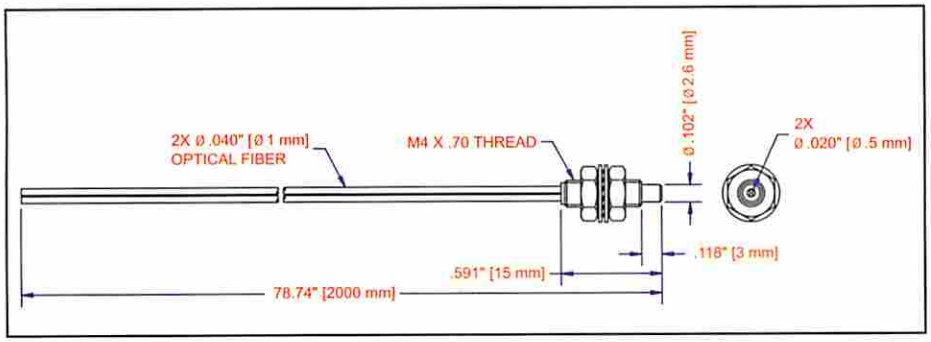

Threaded Tip

MODEL	BUNDLE SIZE
PFD-Q-78M4	.020"

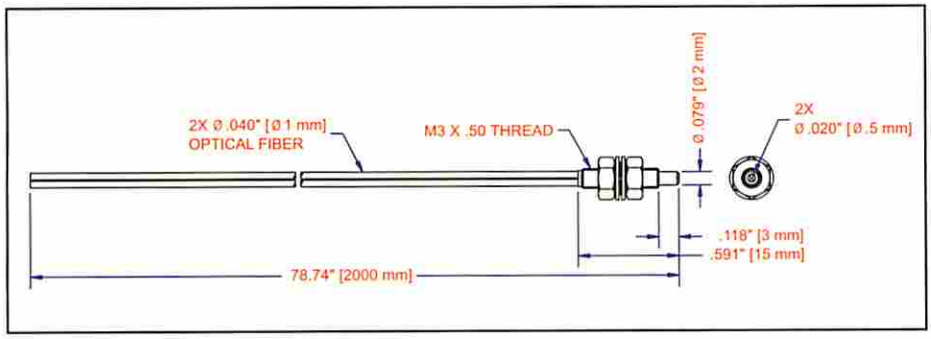

Threaded Tip

MODEL	BUNDLE SIZE
PFD-Q-78M3	.020"

Plastic Diplex Light Guides

Straight Needle Tip, Threaded

MODEL	BUNDLE SIZE
PFD-Z-78T70	.040"

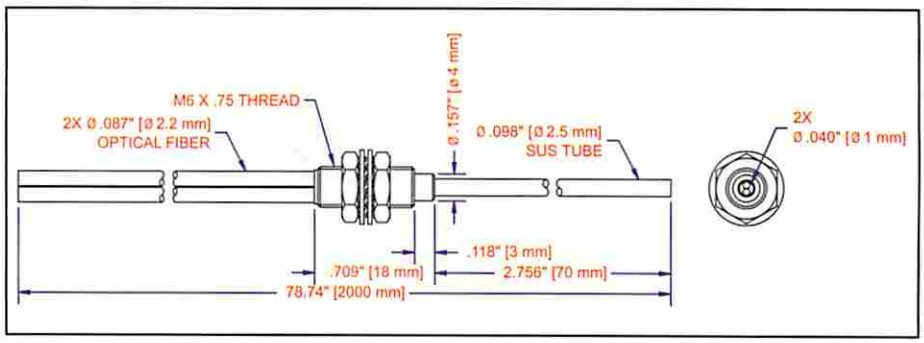

Needle Tip with Threaded Mounting Diplex

MODEL	BUNDLE SIZE
PFD-Q-78T35	.020"

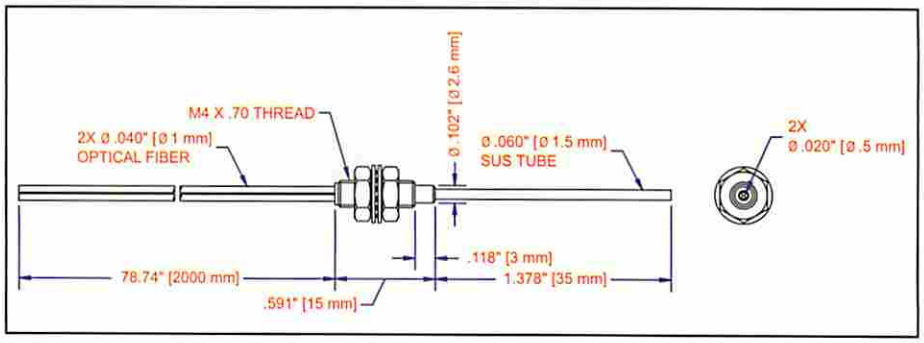

Straight Needle Tip

MODEL	BUNDLE SIZE
BF-W-24PP	.040"

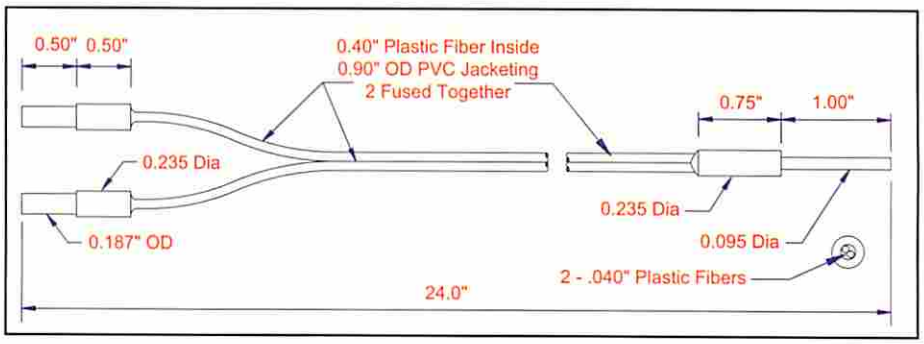

Straight Needle Tip

MODEL	BUNDLE SIZE
BF-Y-72PPC	.040"

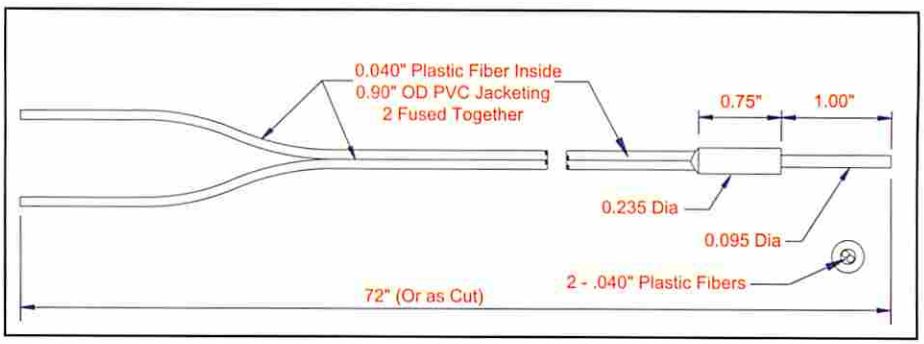

Gap Probe Tip

MODEL	BUNDLE SIZE
PF-G-41	.40"

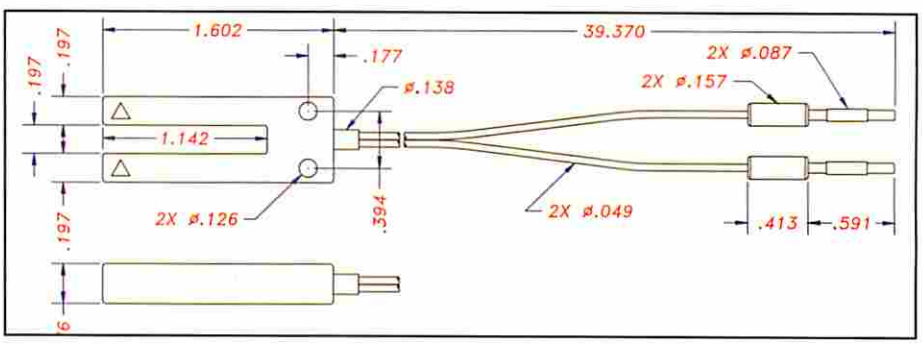

PFD-Z-78M6, PFD-Z-78M64, PFD-Z-78T70, PFD-CZ-78T

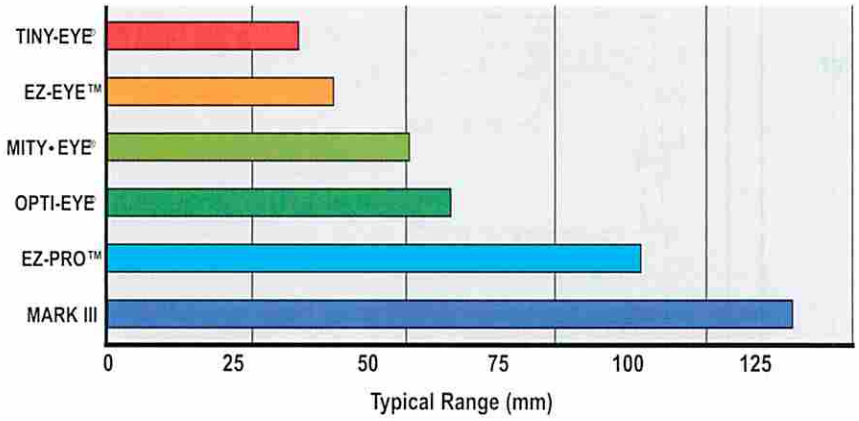

PFD-Q-78M3, PFD-Q-78M4, PFD-Q-78T35,

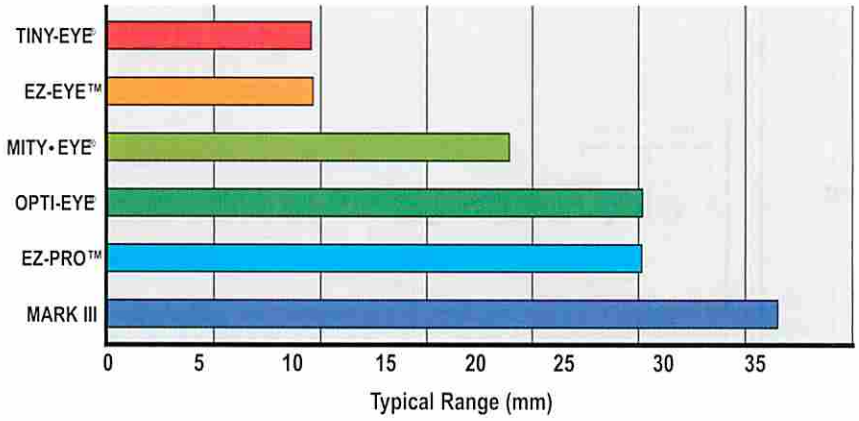

INDIVIDUAL CUT-TO-LENGTH COMPONENTS

Plastic Fiber Cutter, model # PFC-1

Model No.	Description
EH-4001-25	25' of .040 Single Plastic Fiberoptic Cable
EH-4001-50	50' of .040 Single Plastic Fiberoptic Cable
EH-4001-100	100' of .040 Single Plastic Fiberoptic Cable
EH-4002-25	25' of 2-.040" Diplex Plastic Fiberoptic Cable
EH-4002-50	50' of 2-.040" Diplex Plastic Fiberoptic Cable
EH4002-100	100' of 2-.040" Diplex Plastic Fiberoptic Cable
PFC-1	Plastic Fiber Cutter
NFA-50	.5" Nylon Fiberoptic Adaptor, 50 pieces
NFA12-50	.25" Nylon Fiberoptic Adaptor, 50 pieces

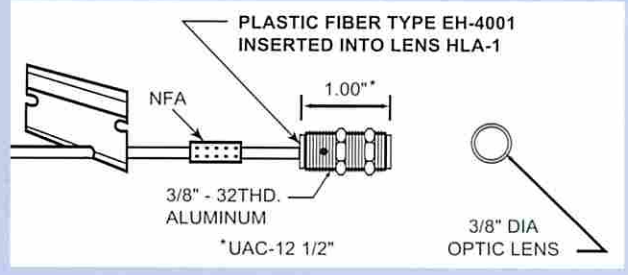

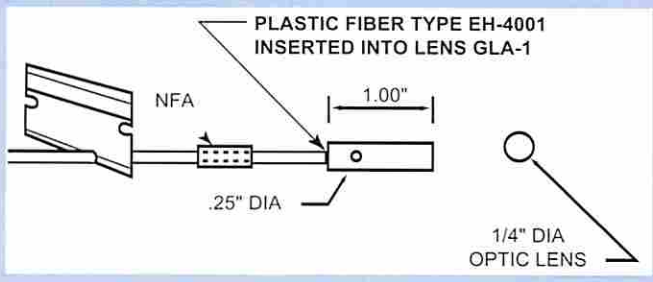

Drawing available at ttco.com

Examples of Custom Light Guides

Custom Fiberoptic tips and lengths BTO (built to order). Please consult factory.

Straight Barrel Tip
PVC Monocoil Jacket
Low Profile

MODEL
BF-A-36X31

BUNDLE SIZE
.125"

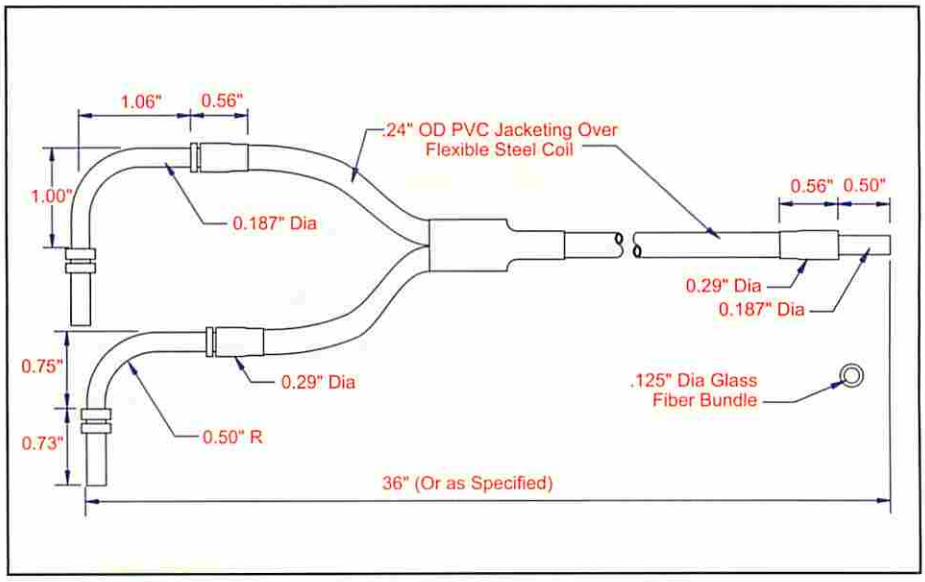

Side View Right
Angle Short Tip
PVC Monocoil Jacket

MODEL
BF-A-36X408

BUNDLE SIZE
.093"

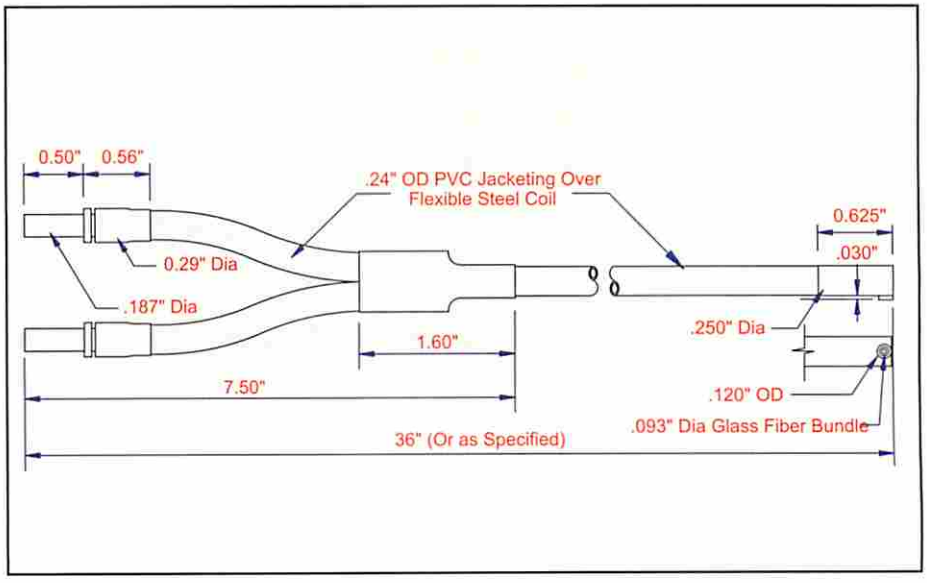

Straight Threaded Tip
Stainless Steel Jacket
Light Pipe

MODEL
F-A-168X448

BUNDLE SIZE
.125"

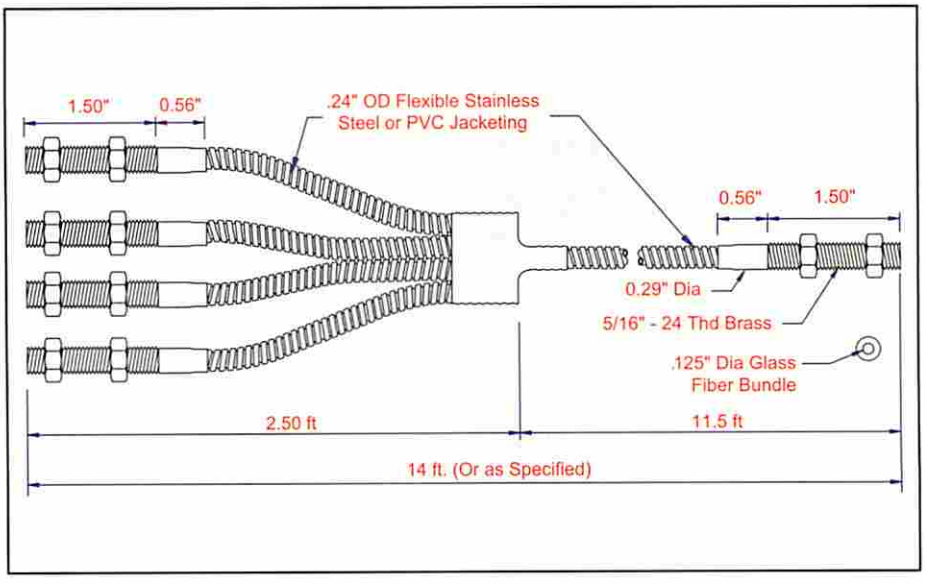

Examples of Custom Light Guides

Custom Fiberoptic tips and lengths BTO (built to order). Please consult factory.

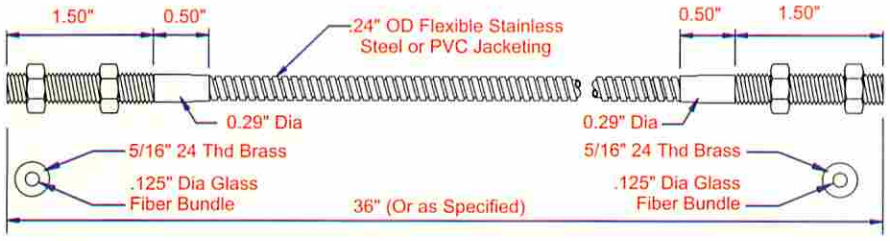

Straight Threaded Tip
Light Pipe
Stainless Steel Jacket

MODEL
F-A-36X70

BUNDLE SIZE
.125"

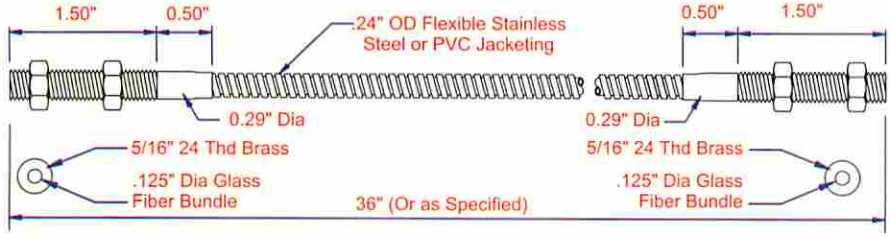

Side View Right Angle
Dual Head Tip
Stainless Steel Jacket

MODEL
BF-A-36X107

BUNDLE SIZE
.093"

Dual Head Tip

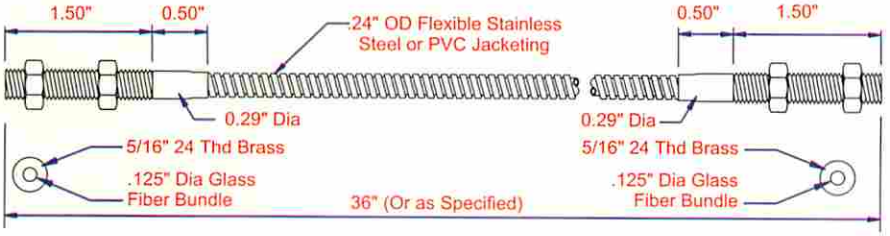

45° Short Curved Tip
Stainless Steel Jacket

MODEL
BF-B-36X397

BUNDLE SIZE
.062"

Short Curved Tip

Examples of Custom Light Guides

Custom Fiberoptic tips and lengths BTO (built to order). Please consult factory.

Right Angle "C" Fiber Stainless Steel Jacket

MODEL
BF-C-36X374

BUNDLE SIZE
0.38" X 0.032"

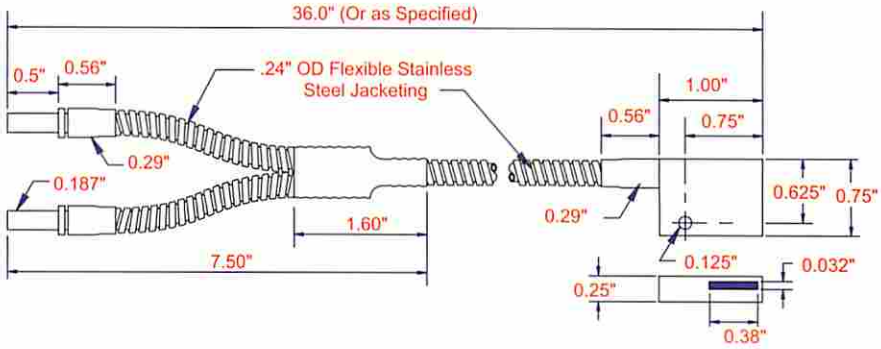

Jig Fit Fiber Stainless Steel Jacket

MODEL
BF-E-36X92

BUNDLE SIZE
.046"

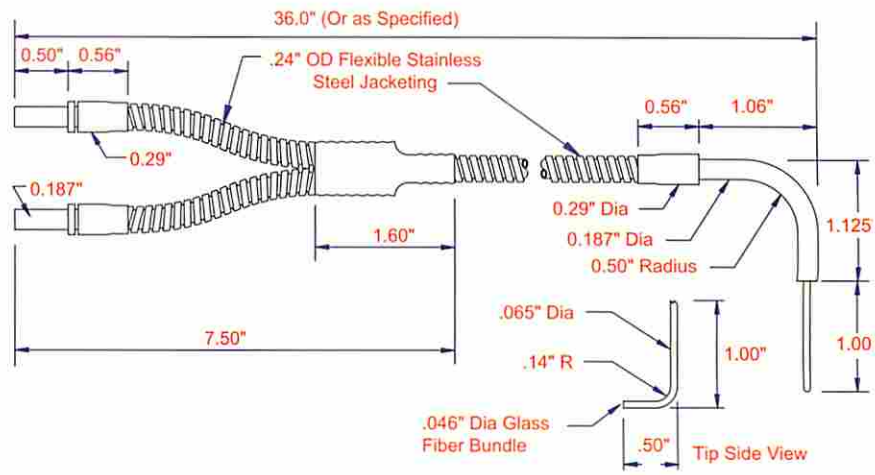

Jig Fit Fiber Stainless Steel Jacket

MODEL
F-A-36X505

BUNDLE SIZE
.093"